Before You Get Started:

1) Ensure you have a level pad of at least 9' x 9' prepared well in advance. We recommend a pad made of either very well compacted gravel or poured concrete. Ennadai Woodworks can not assume any responsibility for installation of our structures on improperly prepared surfaces.

2) Contact a licensed electrician or experienced contractor to help install your heating unit once you're done the build.

3) Read through these instructions ahead of time to make sure that you're comfortable with all aspects of the build. If in doubt, hire a local contractor to assist you. Contact us for recommendations in your area.

4) Ensure all components, hardware items and tools have arrived safely and without damage. If any items appear damaged or missing, contact us right away.

5) Grab a friend or two to help with installation. *This is not a one person job.* Assembly requires lifting and positioning of timber components, as well as use of power tools. If in doubt, hire a professional contractor!

6) Ensure anyone working on the build has adequate personal protective equipment including gloves, eye protection, appropriate work clothing and appropriate footwear.

Construction Notes:

1) During assembly, it is important to ensure all notches are correctly aligned. It is *not* important to ensure each piece fits perfectly flush with the piece beneath. As layers are added, the joints will compress. Even after construction is complete, small gaps will gradually close. As long as each joint is reasonably snug and well aligned, the structure will settle right into place.

2) The bathing area is sealed using strips of gasket tape, placed on the interior tongue of each log as the structure is stacked. We'll remind you about this in every step, but it's important to remember!

3) Wood is an inherently unstable medium, and at times you may encounter a log which is slightly warped or bowed. Many of these logs can be used by aligning the grooves at one end and working your way down the log, tapping it into place as you go. Such pieces may require a 7-$\frac{1}{4}$" GRK Screw to help keep them secure.

4) If a piece is damaged during installation, or it simply will not fit, don't worry. Spares of common wall logs are provided. Try to keep these unused as long as possible to avoid running out.

5) Due to natural material variations and use of tolerance gaps during installation, troublesome pieces may fit nicely in one location and not another. Don't give up on them right away!

6) Sacrificial wall pieces are provided for tapping, bashing and hammering. Be sure to use them to avoid damage to your sauna.

Included With Your Kit:

Timber Components:

Member:	Finished Length:	Qty.:	Description/Notes:
WA-01	7' 3"	14	Common Wall A (inc. 1 spare)
WA-02	3' 10$\frac{1}{8}$"	12	Door Wall Long
WA-03	0' 11$\frac{7}{16}$"	16	Door Wall Short
WA-04	7' 3"	2	Sub Joist Half Height Block
WA-05	7' 3"	2	Joist Layer
WA-06	7' 3"	1	Door Bottom
WA-07	7' 3"	1	Lower Bench Layer Short, Bottom
WA-08	7' 3"	1	Lower Bench Layer Short, Top
WA-09	3' 10$\frac{1}{8}$"	1	Lower Bench Layer Long, Bottom
WA-10	3' 10$\frac{1}{8}$"	1	Lower Bench Layer Long, Top
WA-11	7' 3"	1	Upper Bench Layer Short, Bottom
WA-12	7' 3"	1	Upper Bench Layer Short, Top
WA-13	3' 10$\frac{1}{8}$"	1	Upper Bench Layer Long, Bottom
WA-14	3' 10$\frac{1}{8}$"	1	Upper Bench Layer Long, Top
WA-15	7' 3"	1	Slope Long + Door Top
WA-16	3' 10$\frac{1}{8}$"	1	Slope Short + Door Top
WA-17	7' 3"	1	Slope Long
WA-18	3' 10$\frac{1}{8}$"	1	Slope Short
WB-01	8'	36	Common Wall B (inc. 2 spare)
WB-01VF	8'	1	Common Wall B Vent Front
WB-01VR	8'	1	Common Wall B Vent Rear
WB-02A,B,C,D	Var.	1	High Side Beam Pockets
WB-03A,B,C,D	Var.	1	High Side Blocking
WB-04	8'	1	Low Side Beam Pockets
WB-05A,B,C,D	Var.	1	Low Side Blocking
J-01	6' 3"	2	Joists
B-01	7' 7$\frac{15}{16}$"	2	Beams
FL-01	6'	2	Floor Panel
R-01	7' 7$\frac{15}{16}$"	18	Roof
R-02	7' 7$\frac{15}{16}$"	1	Roof Low Side
R-03	7' 7$\frac{15}{16}$"	1	Roof High Side
FA-01	8' 3$\frac{1}{2}$"	1	Fascia High Side
FA-02	7' 7$\frac{15}{16}$"	2	Fascia Low Side
FA-03	8' 3$\frac{1}{2}$"	1	Fascia Sloped Sides
S-01	4' 1$\frac{3}{4}$"	12	Strapping
T-01	6' 8$\frac{1}{8}$"	2	Door Trim Long - Outer Side
T-02	3'	1	Door Trim Short - Outer Side
T-03	6' 6$\frac{5}{8}$"	2	Door Trim Long - Inner Side
T-04	2' 11"	2	Door Trim Short - Inner Side
C-01	6' 8$\frac{1}{8}$"	2	Door Casing Long
C-02	2' 5$\frac{1}{2}$"	1	Door Casing Top
C-03	2' 5$\frac{1}{2}$"	1	Optional Blackout Jamb
Door	6' 6$\frac{3}{4}$"	1	1x Windowed
Handles	2'	2	
Bench	6' 2$\frac{1}{2}$"	3	17 $\frac{1}{2}$" Wide + 1 $\frac{1}{4}$" Bench Spacers x6

Hardware & Tools:

In Hardware Box
Camplite x2
Rubber Pads x15
Roof Sealant x133'
Log Sealant x18
Interior Vent x2
Exterior Vent x2
Alu Foil Tape x17
1/4" GRK Screws x20 (B, Wall help) + Bit
2 1/2" GRK Trim Screws x80 (T,C,Handle) + Bit
2 1/2" Deck Screws x40 (Fascia)
2 1/2" Deck Screws x100 (Roof)
4" Deck Screws x50 (Blocking)
5" Deck Screws x60 (Strapping)
Roofing Screws (x100 Roof Panels, x20 Roof Fascia)
3/8" Hex Bit x1
3/32" Spiral Bit x1
Robertson Bit x4
Mallet x1

Packed Elsewhere
4x8 Alu Foil Vapour Barrier x2
4x8 3" Rigid Foam x2
Metal Roof Trim
Metal Roof Panels
Heater



ENNADAI WOODWORKS

Instructions

Ennadai Wapta Sauna

General Information

Date: 2023-05-16	Scale: N/A
Drawn: M.Ruta	Approved: M.Reid
Dwg.#: 001	Rev.#: 001

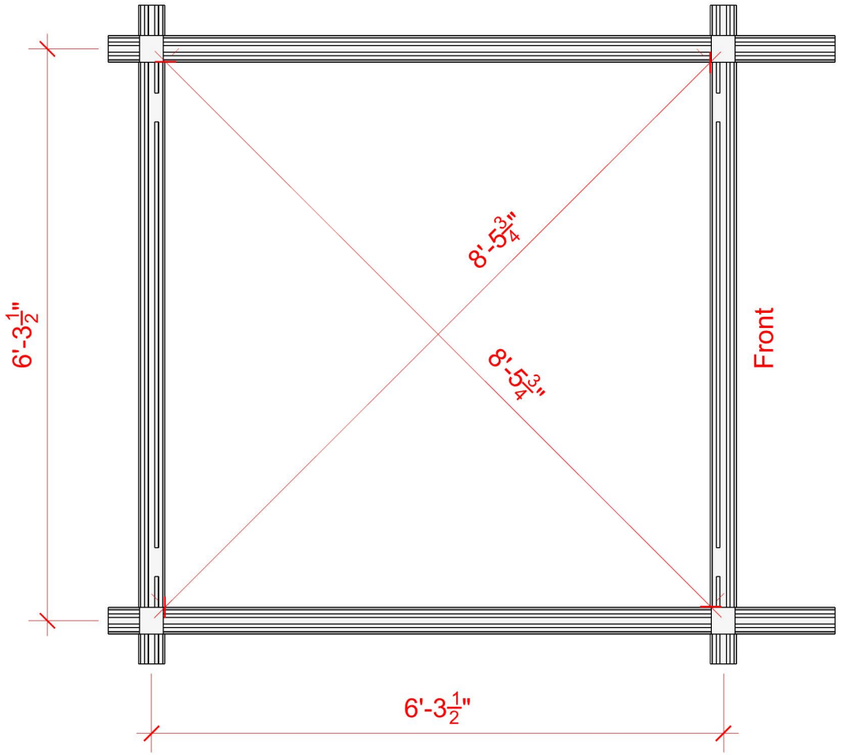

Lay out the labelled wall pieces as shown below.

It is critical that your first layer is correctly aligned! Verify the measurements shown in red.

Note: it is more important that the diagonal measurements match each other than the exact numbers given. The aim is to ensure the corners are as square as possible.

Use the provided rubber leveling pads to ensure the first layer is completely level and well supported.

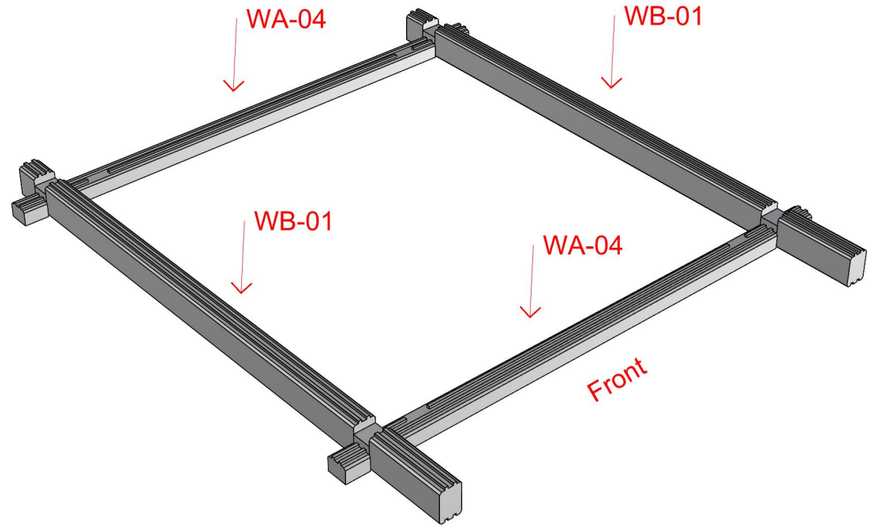

Instructions	
Ennadai Wapta Sauna	
Step 1: Layout	
Date: 2023-05-16	Scale: N/A
Drawn: M.Ruta	Approved: M.Reid
Dwg.#: 002	Rev.#: 001

1) Install joist-pocketed logs as shown below:

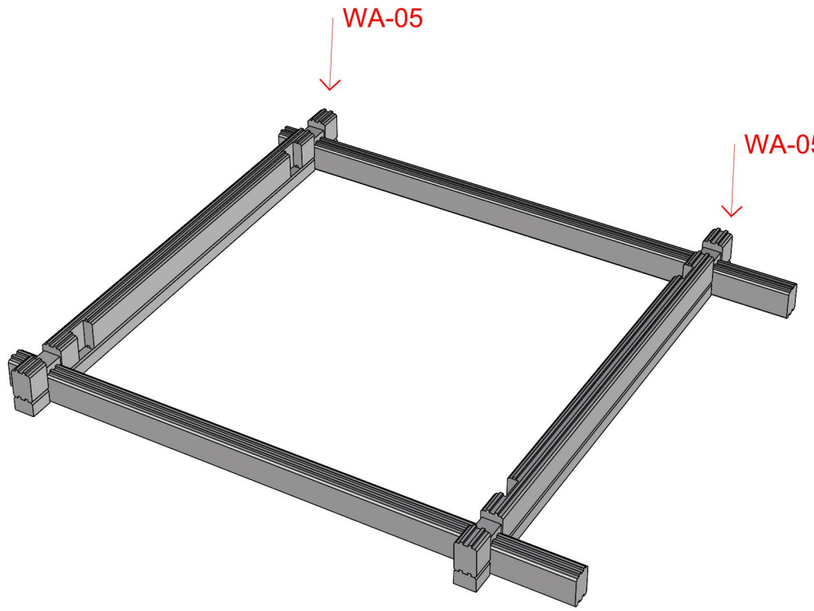

2) Install joists and wall logs as shown below.
Secure Joists with 7-$\frac{1}{4}$" GRK Screws.

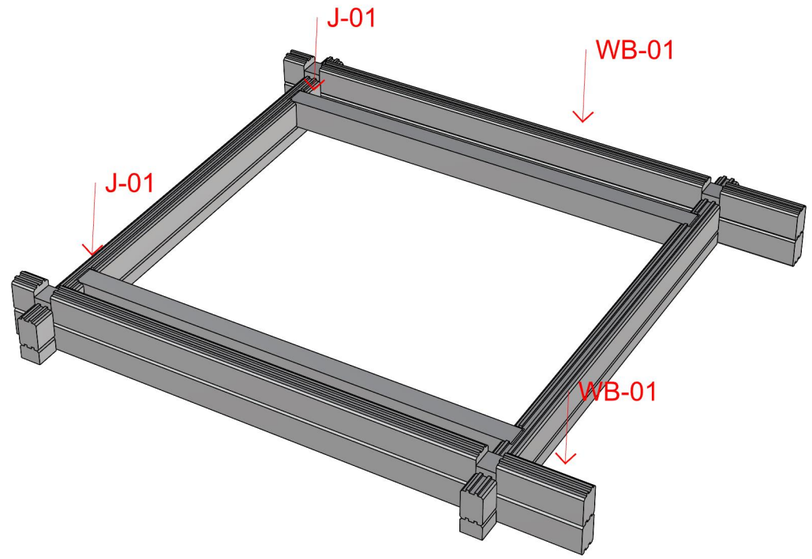

Instructions	
Ennadai Wapta Sauna	
Step 2: Joists	
Date: 2023-05-16	Scale: N/A
Drawn: M.Ruta	Approved: M.Reid
Dwg.#: 003	Rev.#: 001

1) Install wall logs as shown below.

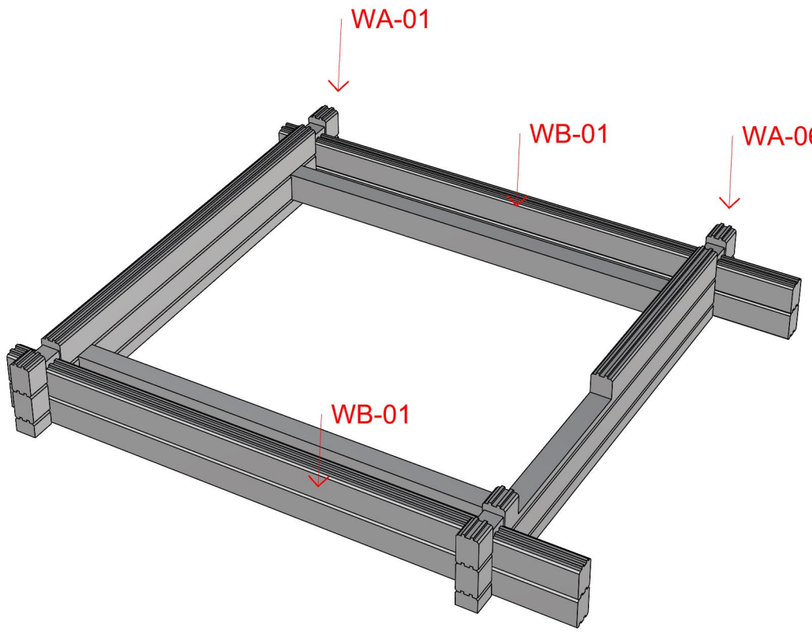

2) Install floor panels as shown below. No fasteners are required, simply place the panels.

3) Begin installing gasket tape on the interior tongue of each wall log surrounding the bathing area. See detail below:

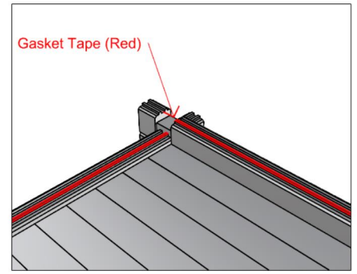

Instructions	
Ennadai Wapta Sauna	
Step 3: Floor	
Date: 2023-05-16	Scale: N/A
Drawn: M.Ruta	Approved: M.Reid
Dwg.#: 004	Rev.#: 001

1) Stack wall logs as shown below. Take care to note specific pieces for lower vent (WB-01VR) and benches (WA-07 - WA-14).

Be sure to install benches as you go. See Bench Detail to right.

Be sure to install vented wall piece (WB-01VR) at marked position, 4 logs from ground in rear wall)

Ensure each course of logs is sealed with gasket tape as shown in detail on previous page.

Important: Measure wall heights periodically to ensure build up is consistent. Use supplied GRKs to close any large gaps which may be allowing excessive height differences. This is mainly an issue around doors, where uneven wall sections may affect the header.

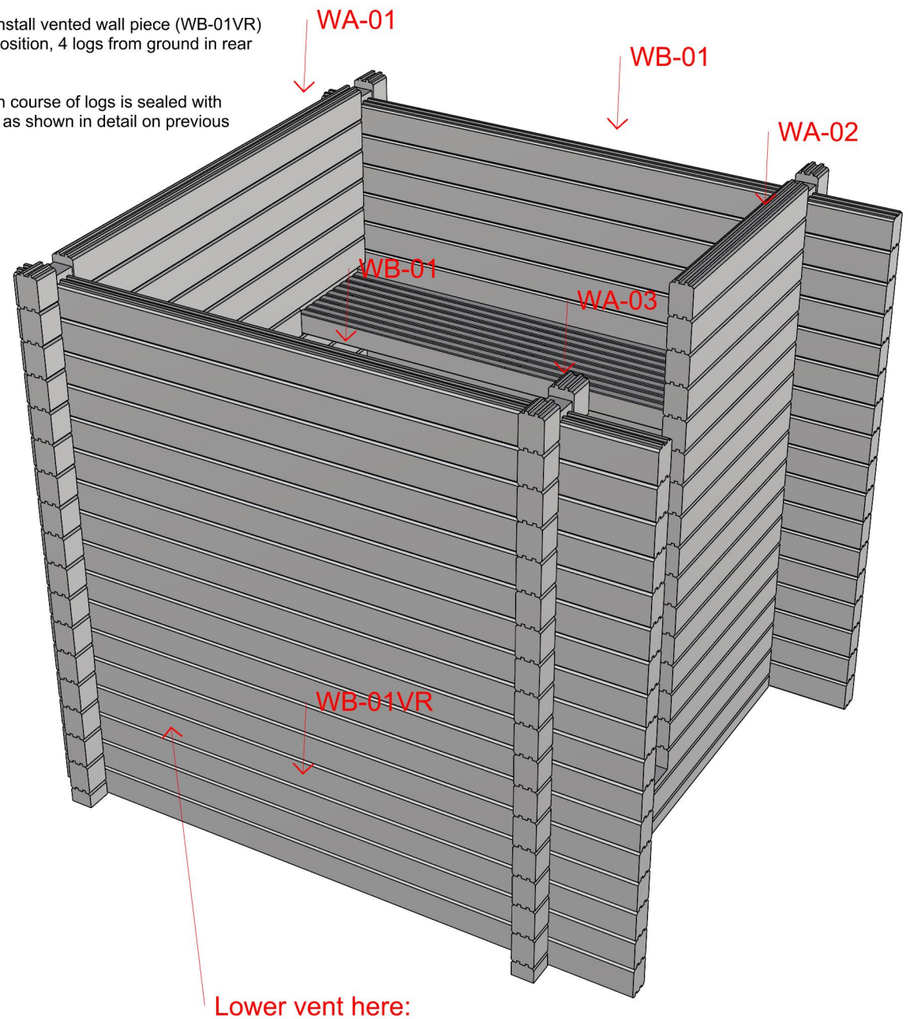

Install benches as shown in detail. No fasteners are required - bench sections simply drop into place once their appropriate layer has been installed.

The lower bench requires two bench assemblies, while the upper bench simply consists of one.

While bench heights can be decided by the installer, we *strongly* recommend installing the benches at the layers shown for the best user experience.

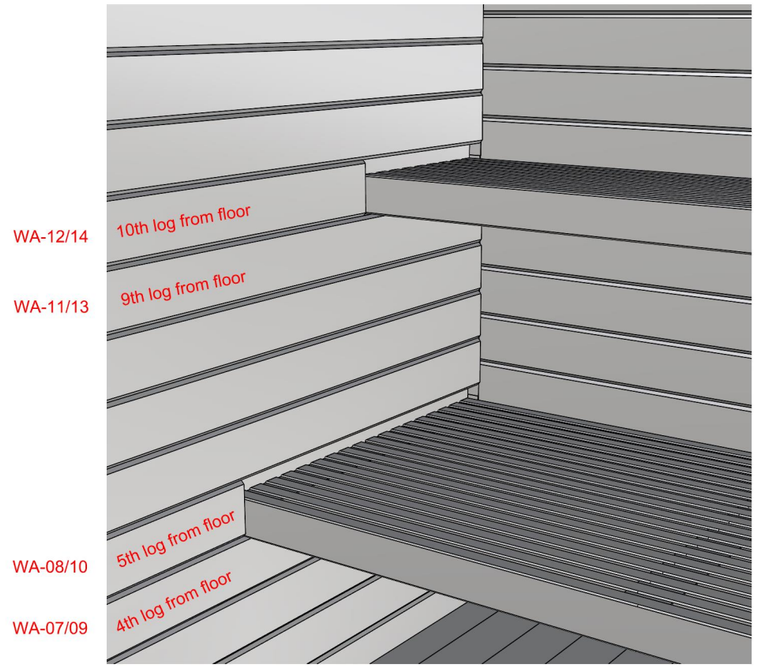

Bench Detail

Instructions	
Ennadai Wapta Sauna	
Step 4: Buildup & Benches	
Date: 2023-05-16	Scale: N/A
Drawn: M.Ruta	Approved: M.Reid
Dwg.#: 005	Rev.#: 001

1) Install wall logs as shown below. Note marked vent location.

Ensure each course of logs is sealed with gasket tape.

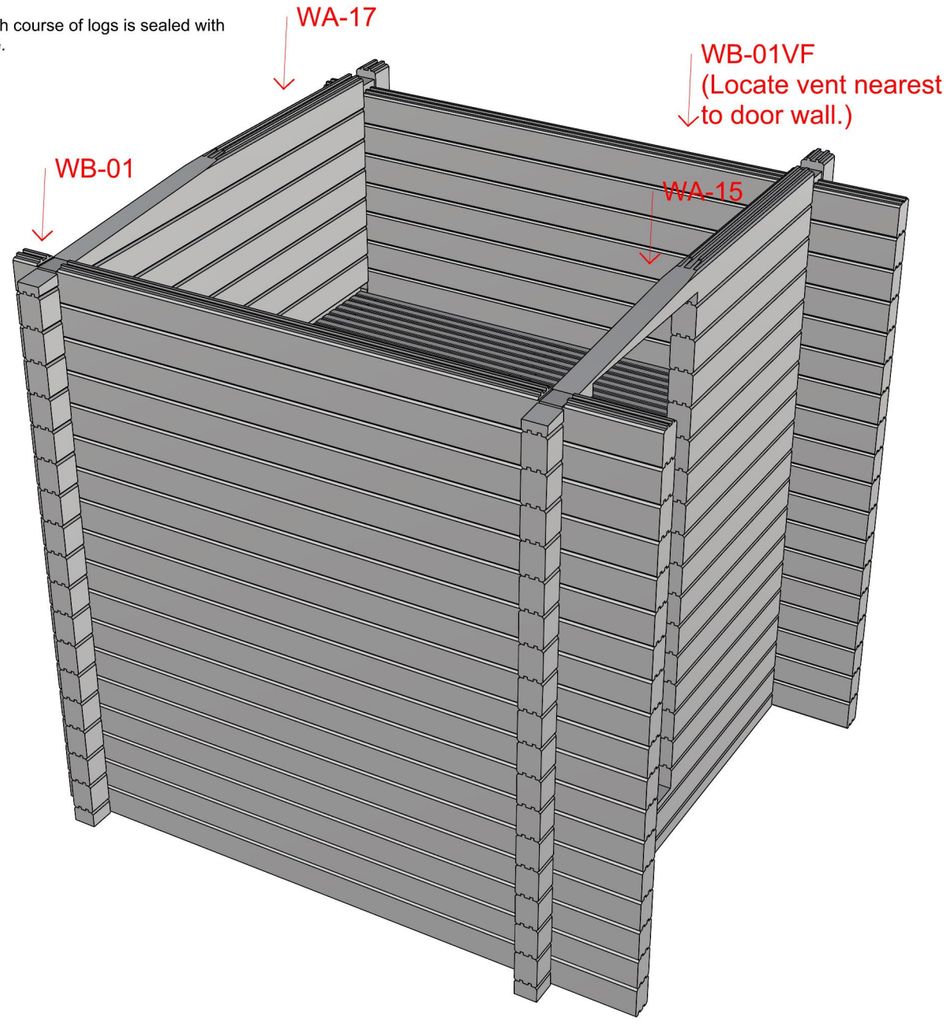

2) Install wall logs as shown below.
Note gaps for beam pockets.

Ensure each course of logs is sealed with gasket tape.

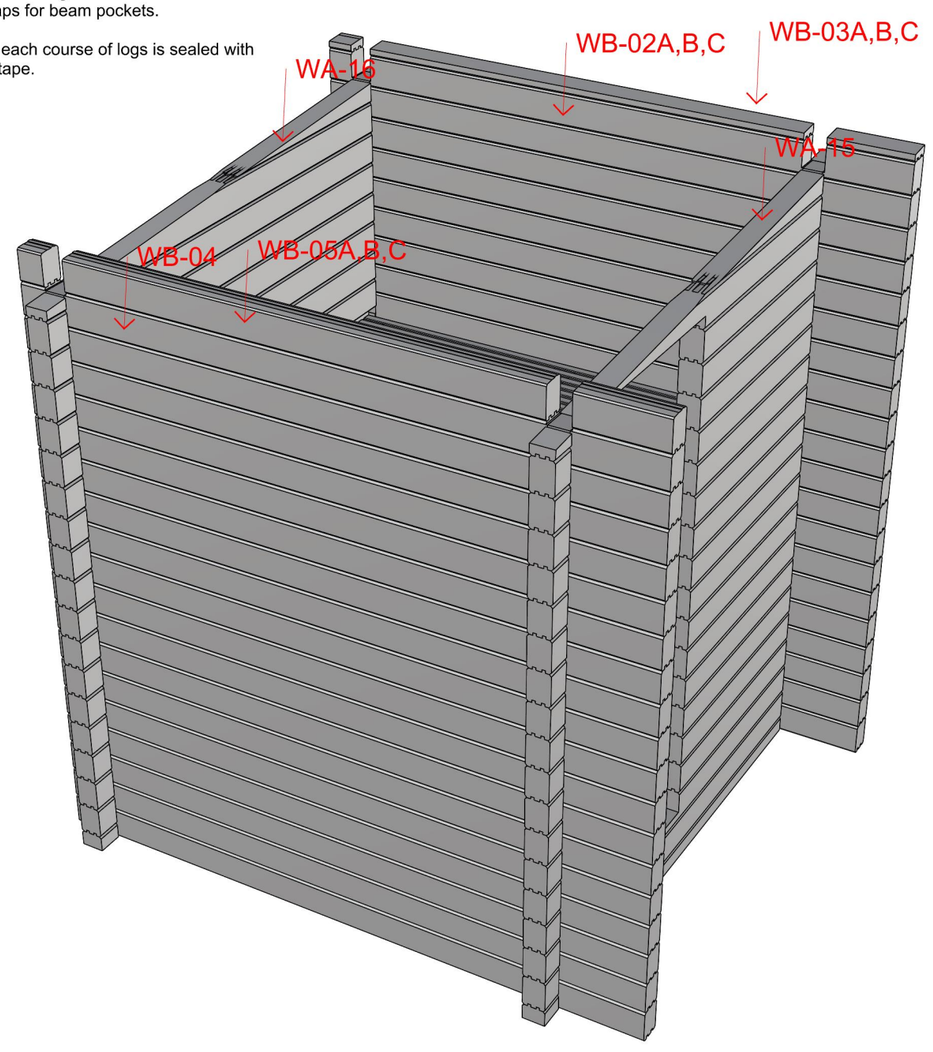

ENNADAI WOODWORKS

Instructions	
Ennadai Wapta Sauna	
Step 5: Roof Slope	
Date: 2023-05-16	Scale: N/A
Drawn: M.Ruta	Approved: M.Reid
Dwg.#: 006	Rev.#: 001

1) Install beams as shown below. Seal beam pockets with gasket tape prior to installation.

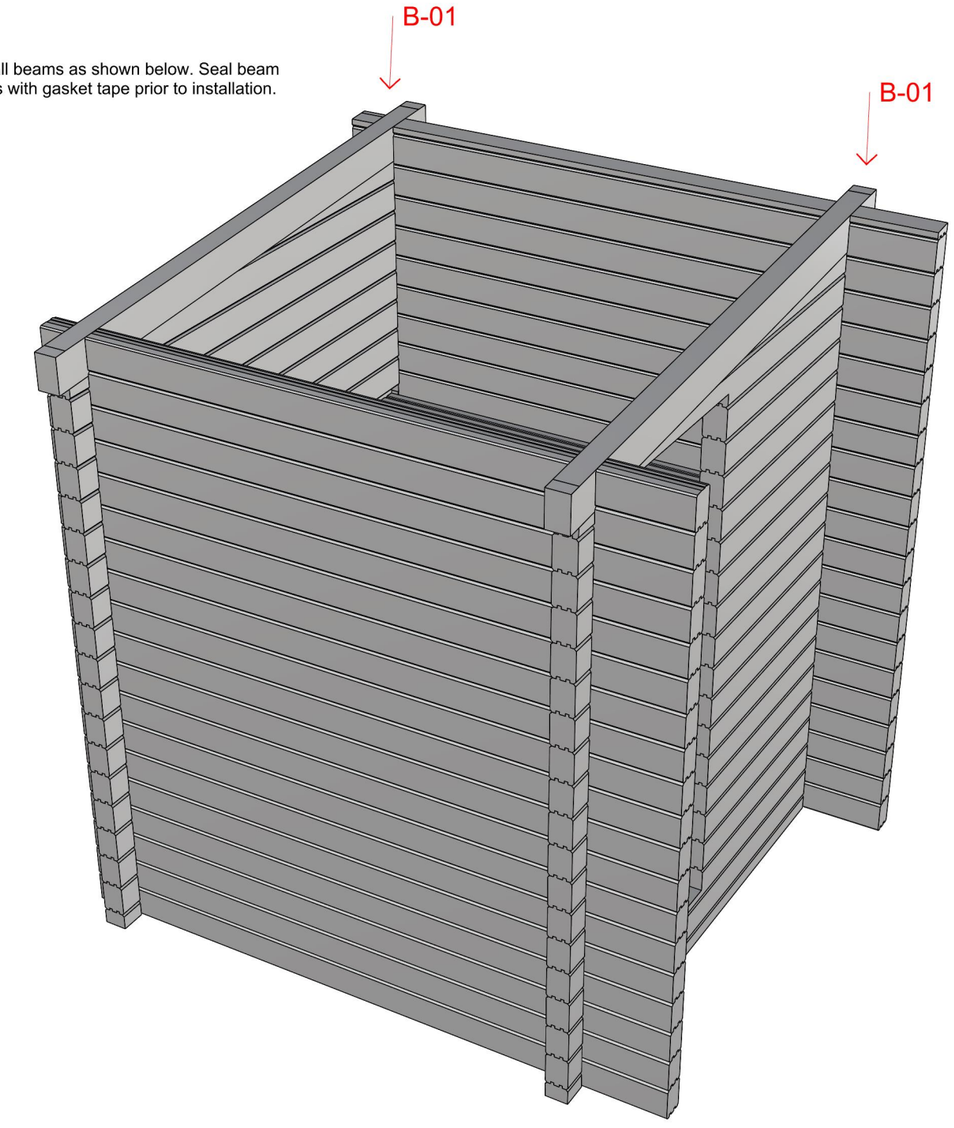

ENNADAI WOODWORKS

Instructions

Ennadai Wapta Sauna

Step 6: Beams

Date: 2023-05-16	Scale: N/A
Drawn: M.Ruta	Approved: M.Reid
Dwg.#: 007	Rev.#: 001

1) Install tongue and groove roof pieces as shown below, securing to beams with supplied screws. There should be no overhang at the front or rear, and approximately 1 $\frac{1}{2}$" on each side.

Ensure R-02 is at low side of roof and R-03 is at high side.

Ensure perimeter of bathing area is sealed with gasket tape prior to install.

Lay foil vapour barrier over tongue and groove surface once complete.

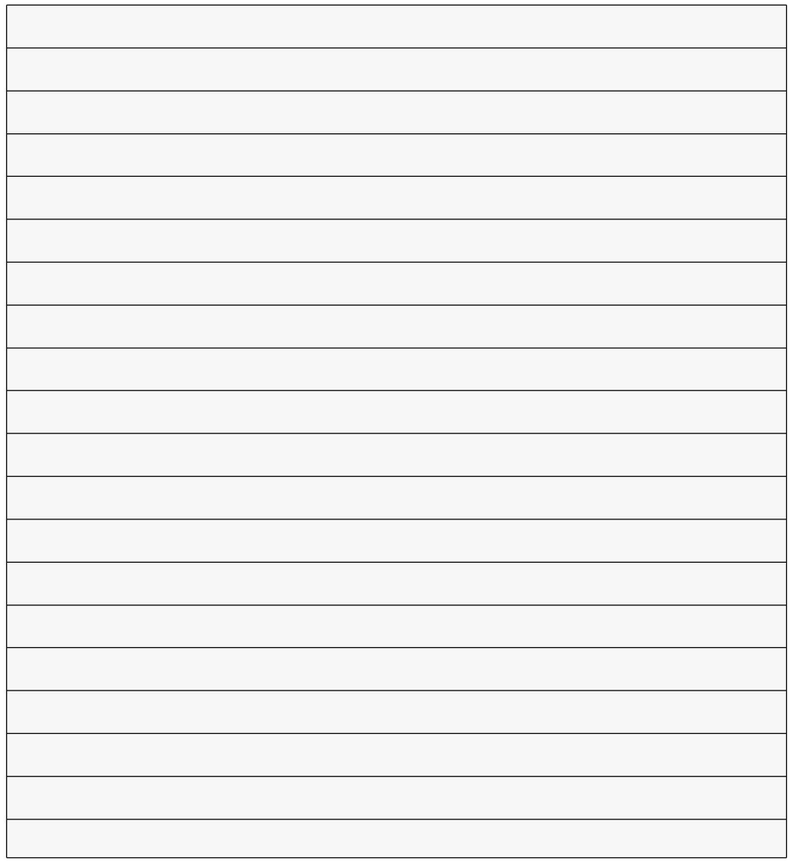

2) Fit insulation above bathing area. Secure using strapping as shown. Pre drill to avoid splitting and secure to roof, through insulation with supplied screws.

Note that no exact spacing is required; just aim to keep the spacing even and use six rows as pictured. The more even the spacing, the easier the roofing install will be.

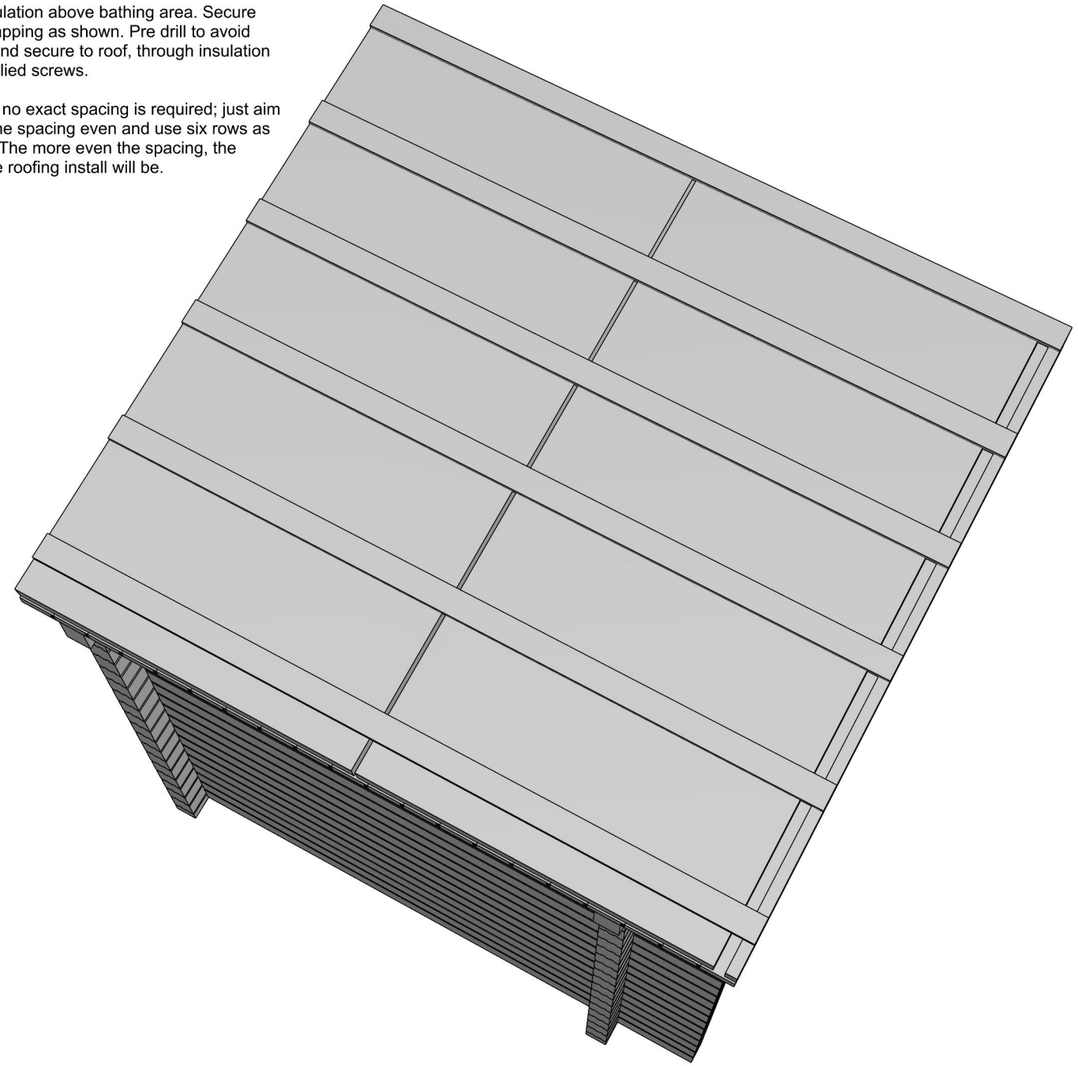

Instructions	
Ennadai Wapta Sauna	
Step 7: Ceiling & Insulation	
Date: 2023-05-16	Scale: N/A
Drawn: M.Ruta	Approved: M.Reid
Dwg.#: 008	Rev.#: 001

1) Install metal roofing sheets with supplied colour coordinated roofing screws as per manufacturer's instructions.

Allow ~2.5” of overhang on all sides to accomodate fascia and a small overhang later.

Of particular note: not over tighten roofing screws. The rubber washer must not bottom out, or the screw holes may develop leaks over time. Again, please consult the manufacturer's reccomendations for your chosen roofing product.

While we will do everything in our power to ensure a successful installation, Ennadai cannot bear any responsibility for incorrectly installed roofing.

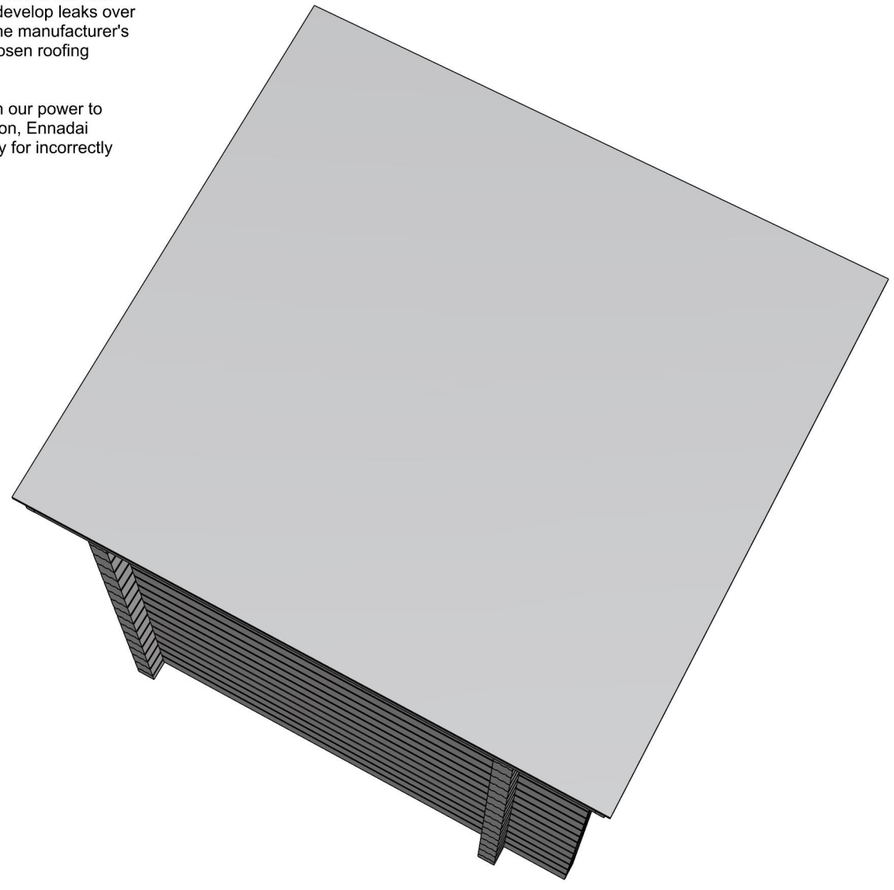

2) Install fascia as shown. Secure with supplied screws.

Note that only half of the fascia is pictured. Install remainder in same manner.

Once the fascia is installed, drip edge, gable trim, ridge cap and any remaining roofing material may be installed per manufacturer's instructions.

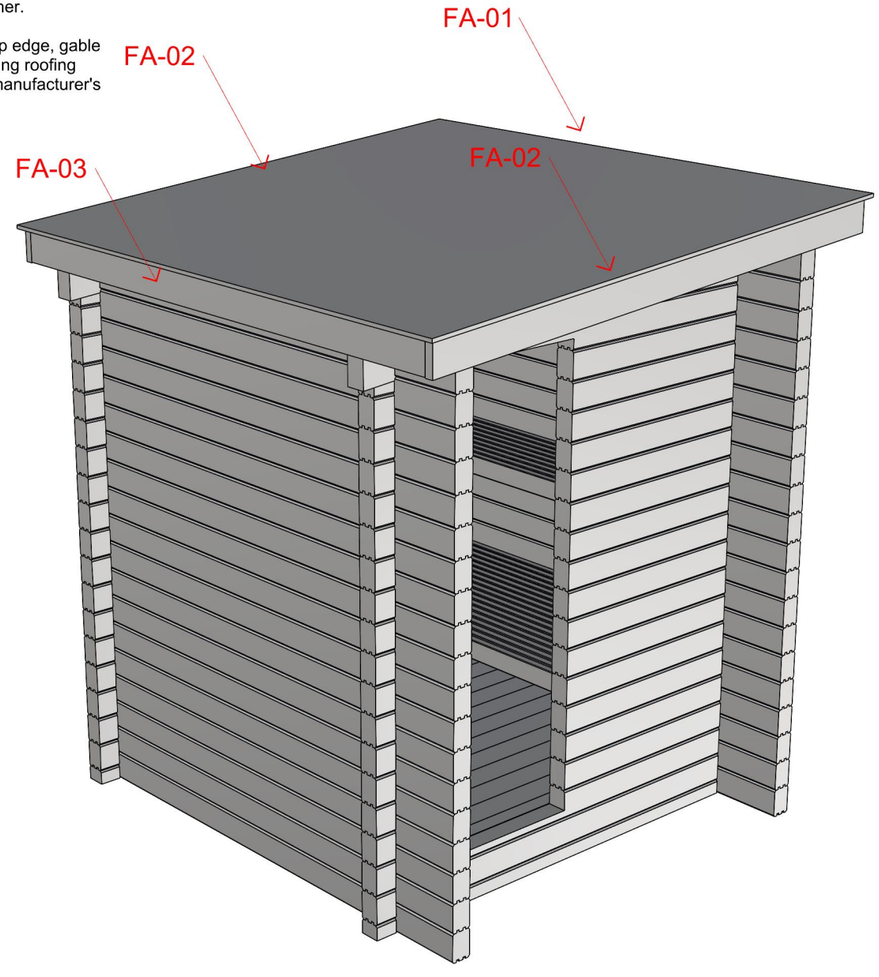

ENNADAI WOODWORKS	Instructions	
	Ennadai Wapta Sauna	
	Step 8: Roof & Fascia	
	Date: 2023-05-16	Scale: N/A
	Drawn: M.Ruta	Approved: M.Reid
	Dwg.#: 009	Rev.#: 001

1) Install trim and casing in each door frame as pictured. Pre-drill to avoid splitting and fasten using supplied screws.

Ensure built-in door stops face interior space when installing casing.

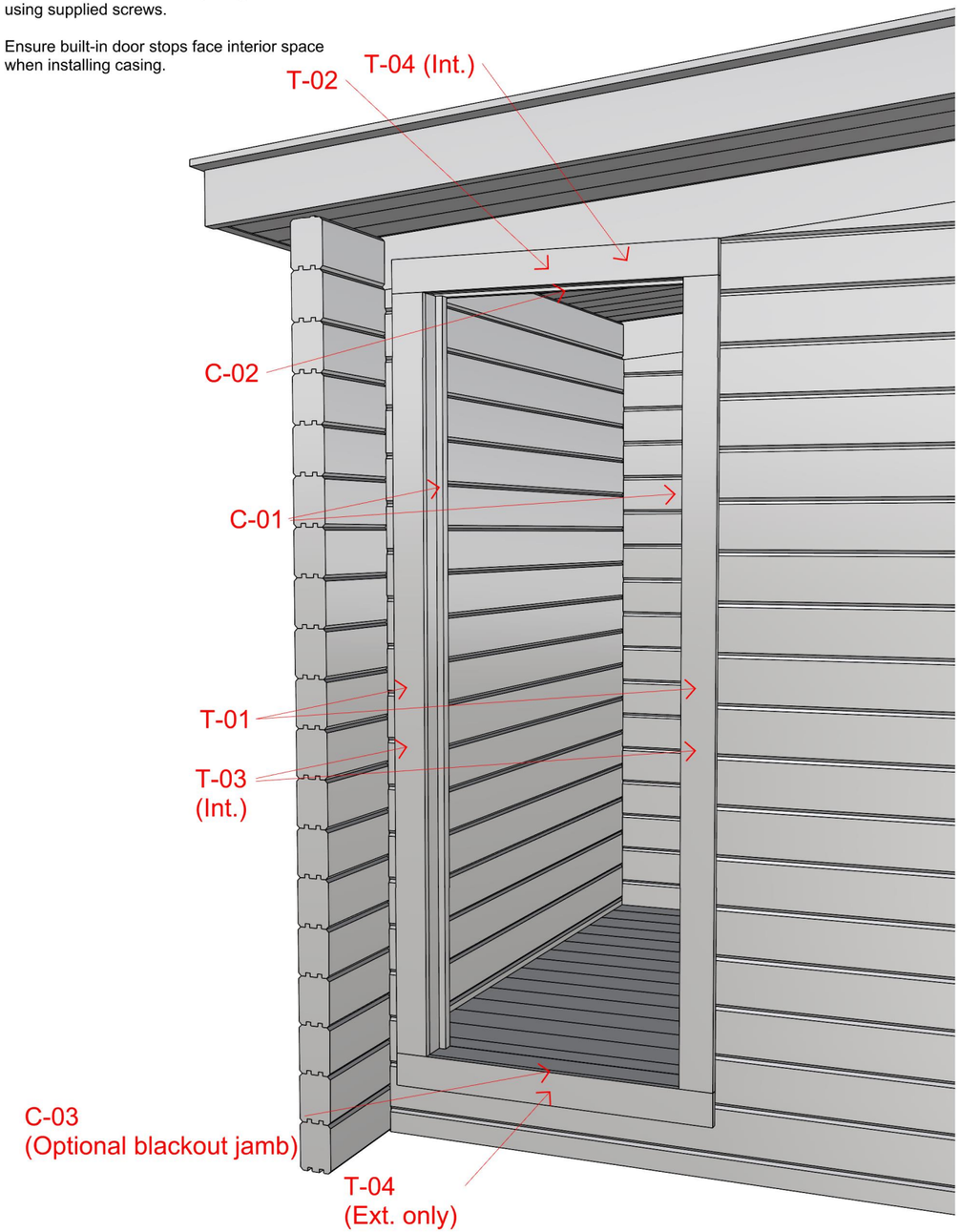

3) Install door as shown.

First, affix CampLite hinges (not pictured) to doors, equally spaced.

Place doors in openings and use shims as necessary to locate the doors at the correct height and spacing from the frame. Once satisfied with the position, fix hinges to wall using the supplied screws.

Ensure the hinge lies flush with the wall prior to driving screws or the door may move when tightened.

Note that the smooth surface of door is intended to face outward. Do not tighten screws completely until satisfied with position of door.

Note that both doors are intended to open outward. Hinges should be installed to allow for outward swing.

2) Install door handles in desired position using supplied screws. Offset interior and exterior handle positions slightly to avoid screw contact inside the door. Ensure handle screws are fixed to door bracing and not only the door panel, or screws may protrude through door.

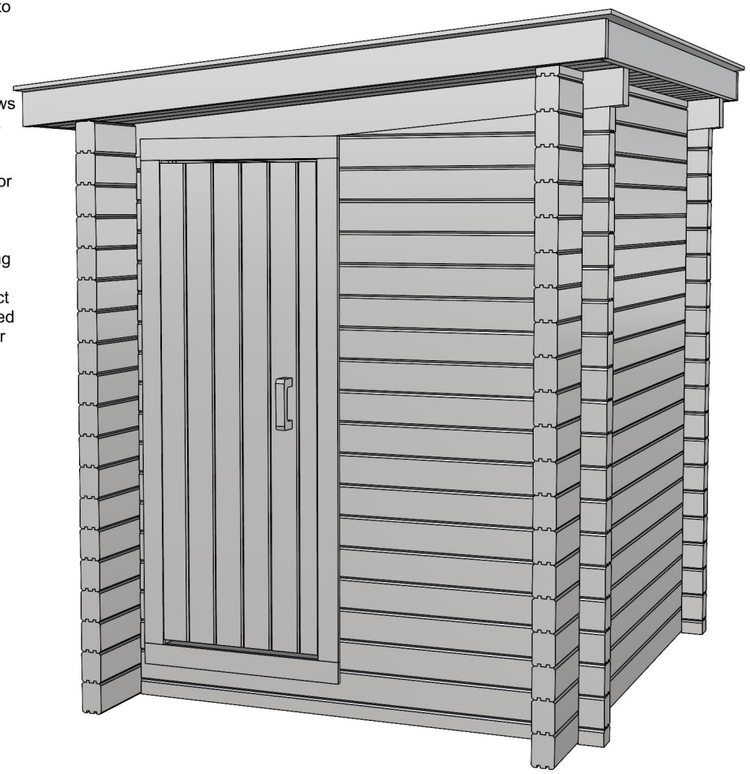

Instructions	
Ennadai Wapta Sauna	
Step 9: Door & Trim	
Date: 2023-05-16	Scale: N/A
Drawn: M.Ruta	Approved: M.Reid
Dwg.#: 010	Rev.#: 001