## Before You Get Started:

1) Ensure you have a level pad of at least 12' x 9' prepared well in advance. We recommend a pad made of either very well compacted gravel or poured concrete. Ennadai Woodworks can not assume any responsibility for installation of our structures on improperly prepared surfaces.

2) Contact a licensed electrician or experienced contractor to help install your heating unit once you're done the build.

3) Read through these instructions ahead of time to make sure that you're comfortable with all aspects of the build. If in doubt, hire a local contractor to assist you. Contact us for recommendations in your area.

4) Ensure all components, hardware items and tools have arrived safely and without damage. If any items appear damaged or missing, contact us right away.

5) Grab a friend or two to help with installation. *This is not a one person job.* Assembly requires lifting and positioning of timber components, as well as use of power tools. If in doubt, hire a professional contractor!

6) Ensure anyone working on the build has adequate personal protective equipment including gloves, eye protection appropriate work clothing and appropriate footwear.

## Construction Notes:

1) During assembly, it is important to ensure all notches are correctly aligned. It is *not* important to ensure each piece fits perfectly flush with the piece beneath. As layers are added, the joints will compress. Even after construction is complete, small gaps will gradually close. As long as each joint is reasonably snug and well aligned, the structure will settle right into place.

2) The bathing area is sealed using strips of gasket tape, placed on the interior tongue of each log as the structure is stacked. We'll remind you about this in every step, but it's important to remember!

3) Wood is an inherently unstable medium, and at times you may encounter a log which is slightly warped or bowed. Many of these logs can be used by aligning the grooves at one end and working your way down the log, tapping it into place as you go. Such pieces may require a 7-$\frac{1}{4}$" GRK Screw to help keep them secure.

4) If a piece is damaged during installation, or it simply will not fit, don't worry. Spares of common wall logs are provided. Try to keep these unused as long as possible to avoid running out.

5) Due to natural material variations and use of tolerance gaps during installation, troublesome pieces may fit nicely in one location and not another. Don't give up on them right away!

6) Sacrificial wall pieces are provided for tapping, bashing and hammering. Be sure to use them to avoid damage to your sauna.

## Included With Your Kit:

### Timber Components:

| Member: | Finished Length: | Qty.: | Description/Notes: |
|---|---|---|---|
| WA-01 | 8' 3" | 31 | Common Wall (inc. 2 spare) |
| WA-02 | 8' 3" | 1 | Central Half Height Block |
| WA-03A,B | Var. | 1 | Int. Door Top |
| WA-04A,B,C | Var. | 1 | Int. Door Bottom |
| WA-05 | 0' 11$\frac{7}{16}$" | 15 | Int. Door Short |
| WA-06 | 4' 10$\frac{1}{16}$" | 15 | Int. Door Long |
| WA-07 | ~5' | 3 | Slope Short |
| WA-08A,B | Var. | 2 | Slope Long |
| WA-09 | 8' 3" | 2 | Sub-Joist Half Height Block |
| WA-10 | 8' 3" | 2 | Joist Layer |
| WA-10A,B,C,D | Var. | 1 | Central Joist Layer |
| WA-11 | 4' 10$\frac{1}{16}$" | 1 | Lower Bench Layer Short, Bottom |
| WA-12 | 4' 10$\frac{1}{16}$" | 1 | Lower Bench Layer Short, Top |
| WA-13 | 8' 3" | 1 | Lower Bench Layer Long, Bottom |
| WA-14 | 8' 3" | 1 | Lower Bench Layer Long, Top |
| WA-15 | 4' 10$\frac{1}{16}$" | 1 | Upper Bench Layer Short, Bottom |
| WA-16 | 4' 10$\frac{1}{16}$" | 1 | Upper Bench Layer Short, Top |
| WA-17 | 8' 3" | 1 | Upper Bench Layer Long, Bottom |
| WA-18 | 8' 3" | 1 | Upper Bench Layer Long, Top |
| WB-01 | 11' 11$\frac{1}{2}$ | 21 | Common Wall (inc. 2 spare) |
| WB-02 | 8' 3" | 16 | Ext. Door Long |
| WB-03 | 0' 15" | 16 | Ext. Door Short |
| WB-04 | 11' 11$\frac{1}{2}$ | 1 | |
| WB-05A,B,C,D | Var. | 1 | |
| WB-06 | 11' 11$\frac{1}{2}$ | 1 | |
| WB-07A,B,C,D | Var. | 1 | |
| WB-08 | 11' 11$\frac{1}{2}$ | 1 | Ext. Door Bottom |
| J-01 | 7' 3" | 3 | Interior Joist |
| J-02 | 3' 8$\frac{3}{8}$" | 3 | Exterior Joist |
| B-01 | 10' 4$\frac{15}{16}$" | 3 | Beam |
| FL-01 | 6' 11$\frac{3}{4}$" | 3 | Interior Floor Panel |
| FL-02 | 6' 11$\frac{3}{4}$" | 1 | Vestibule Floor Panel |
| R-01 | 4' 4$\frac{1}{4}$" | 4 | Roof Panel Short |
| R-04 | 7' 11$\frac{1}{4}$" | 4 | Roof Panel Long |
| S-01 | 4' 4$\frac{1}{4}$" | 7 | Strapping |
| S-02 | 7' 11$\frac{1}{4}$" | 7 | Strapping |
| S-03 | 2' 6$\frac{1}{2}$" | 3 | Blocking |
| S-04 | 5' 4" | 2 | Blocking |
| FA-01 | 8' 0$\frac{3}{4}$" | 2 | Fascia |
| FA-02 | 4' 5$\frac{3}{4}$" | 2 | Fascia |
| FA-03 | 8' 0$\frac{3}{4}$" | 2 | Fascia |
| FA-04 | 4' 5$\frac{3}{4}$" | 2 | Fascia |
| FA-05 | ~5' 6" | 4 | Fascia |
| T-01 | 6' 8$\frac{1}{8}$" | 6 | Long Door Trim |
| T-02 | 2' 11" | 4 | Short Door Trim |
| T-03 | 6' 5$\frac{1}{2}$" | 2 | Interior Long Door Trim (Bathing Area Side) |
| C-01 | 6' 8$\frac{1}{8}$" | 4 | Door Casing |
| C-02 | 6' 3 | 2 | Optional Blackout Casing |
| Bench | Var. | 3 | |
| Door | Var. | 2 | |

### Hardware & Tools:

Camplite Hinges x4
Rubber Pads x15
Roof Sealant x2
33' Log Sealant x18
Vent x2
Alu Foil Tape x1
7 1/4" GRK Screws x20 (Beams, Joists)
2 1/2" GRK Trim Screws x80 (T,C,Handle)
2 1/2" Deck Screws x40 (Fascia)
2 1/2" Deck Screws x100 (Roof, Vents)
4" Deck Screws x50 (Blocking)
4" Deck Screws x60 (Strapping)
3/32" Spiral Bit x1
Robertson Bit x5
Mallet x1
4x8 Alu Foil Vapour Barrier x2
4x8 1" Rigid Foam x2
4x8 2" Rigid Foam x2

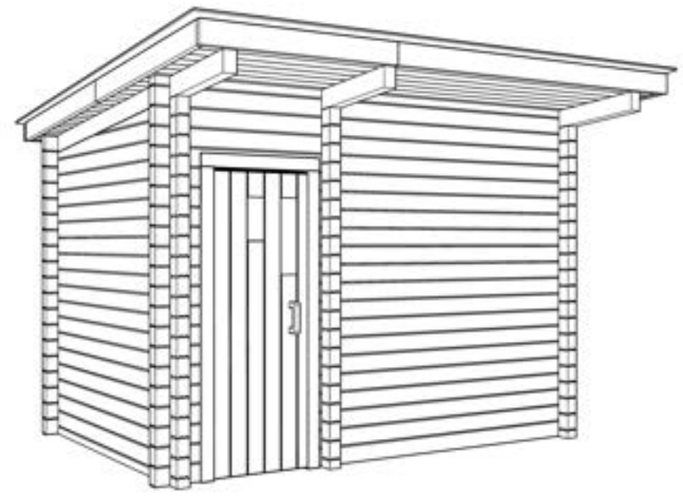

ENNADAI WOODWORKS

# Instructions

## Ennadai Polar Star Sauna

## General Information

| | |
|---|---|
| Date: 2023-05-16 | Scale: N/S |
| Drawn: EnnWood | Approved: EnnWood |
| Dwg.#: 001 | Rev.#: N/A |

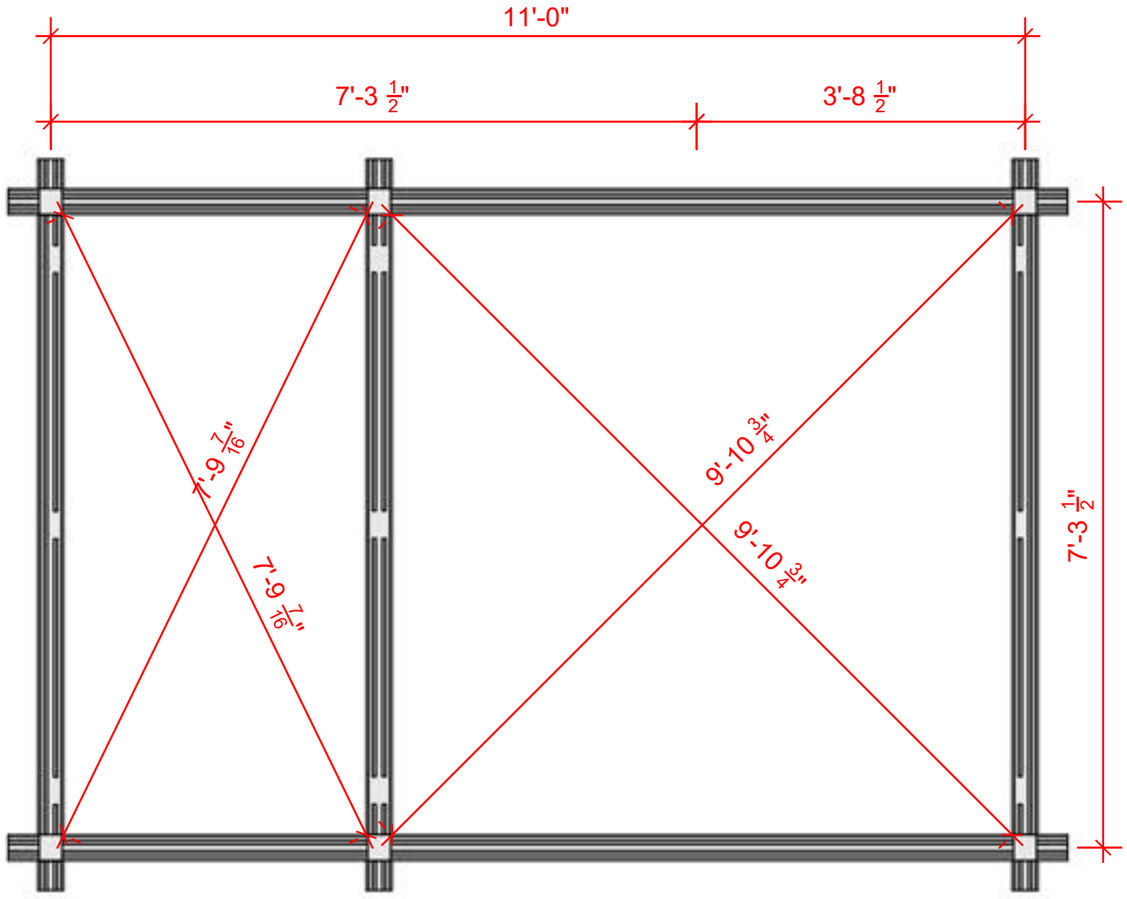


Lay out the labelled wall pieces as shown below.

It is critical that your first layer is correctly aligned! Verify the measurements shown in red.

Note: it is more important that the diagonal measurements match each other than the exact numbers given. The aim is to ensure the corners are as square as possible.

Use the provided rubber leveling pads to ensure the first layer is completely level and well supported.

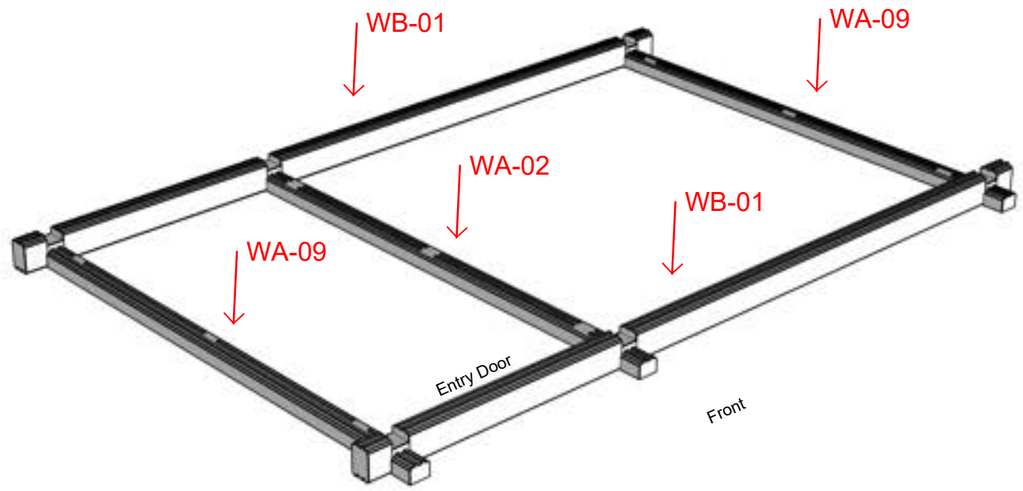


| | | |
|---|---|---|
| | Instructions | |
| | Ennadai Polar Star Sauna | |
| | Step 1: Layout | |
| | Date: 2023-05-16 | Scale: N/S |
| | Drawn: EnnWood | Approved: EnnWood |
| | Dwg.#: 002 | Rev.#: N/A |

1) Install joist-pocketed logs as shown below:

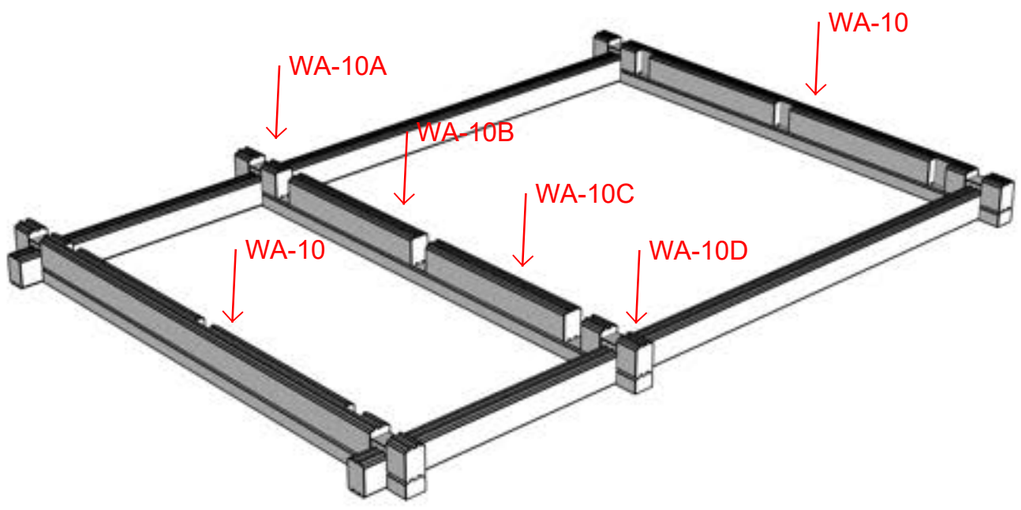


2) Install joists and wall logs as shown below.
Secure Joists with 7-$\frac{1}{4}$" GRK Screws.

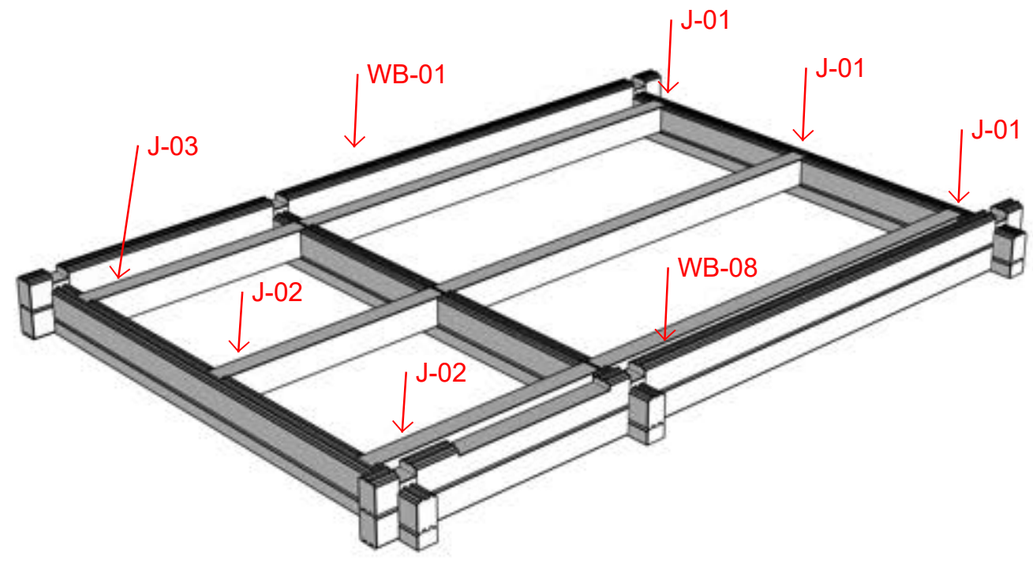


| | | |
|---|---|---|
| | Instructions | |
| | Ennadai Polar Star Sauna | |
| | Step 2: Floor Joists | |
| | Date: 2023-05-16 | Scale: N/S |
| | Drawn: EnnWood | Approved: EnnWood |
| | Dwg.#:003 | Rev.#: N/A |

1) Install wall logs as shown below. Note that WB-04 is shipped in four sections, labelled A,B,C and D.

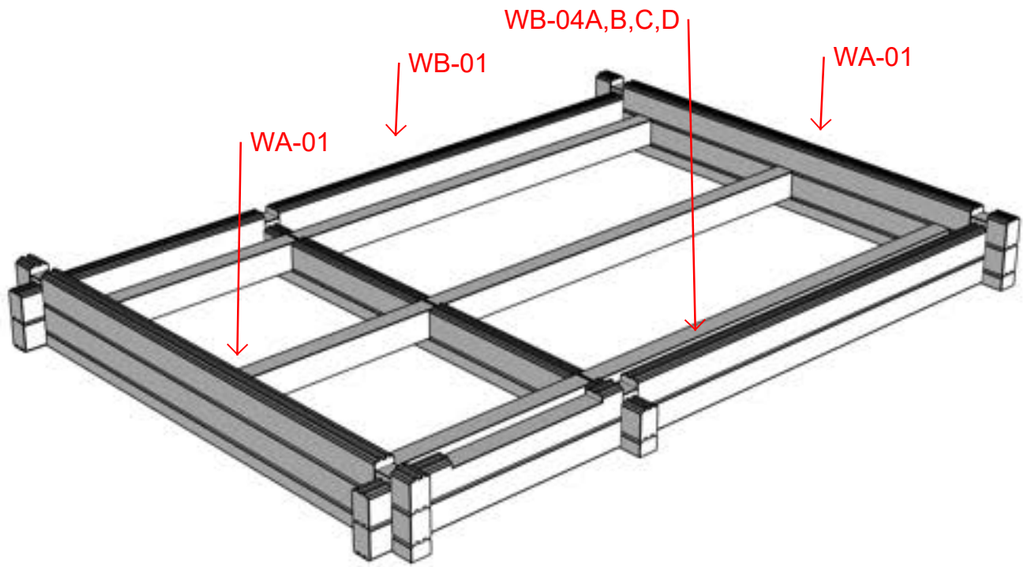


2) Install floor panels as shown below. No fasteners are required, sinply place the panels.

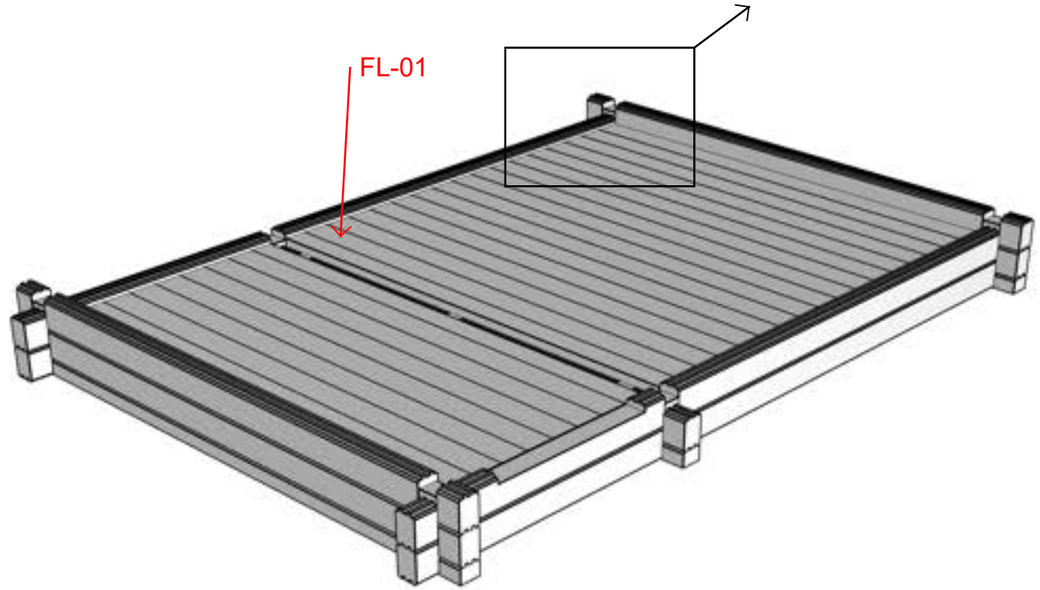


3) Begin installing gasket tape on the interior tongue of each wall log surrounding the bathing area. See detail below:

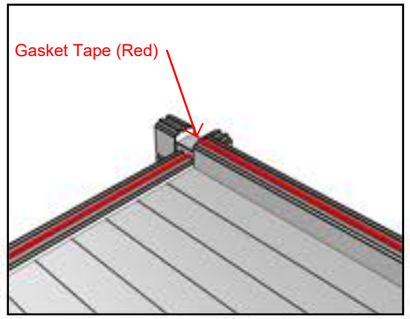


| | | |
|---|---|---|
| | Instructions | |
| | Ennadai Polar Star Sauna | |
| | Step 3: Floor | |
| | Date: 2023-05-16 | Scale: N/S |
| | Drawn: EnnWood | Approved: EnnWood |
| | Dwg.#: 004 | Rev.#: N/A |

1) Stack wall logs as shown below. Take care to note specific pieces for the interior door (WA-04), lower vent (WB-01HR) benches (WA-11 - WA-18).

Be sure to install benches as you go. See Bench Detail to right.

Be sure to install vented wall piece (WB-01HR) at marked position, 4 logs from ground in rear wall)

Ensure each course of logs is sealed with gasket tape as shown in detail on previous page.

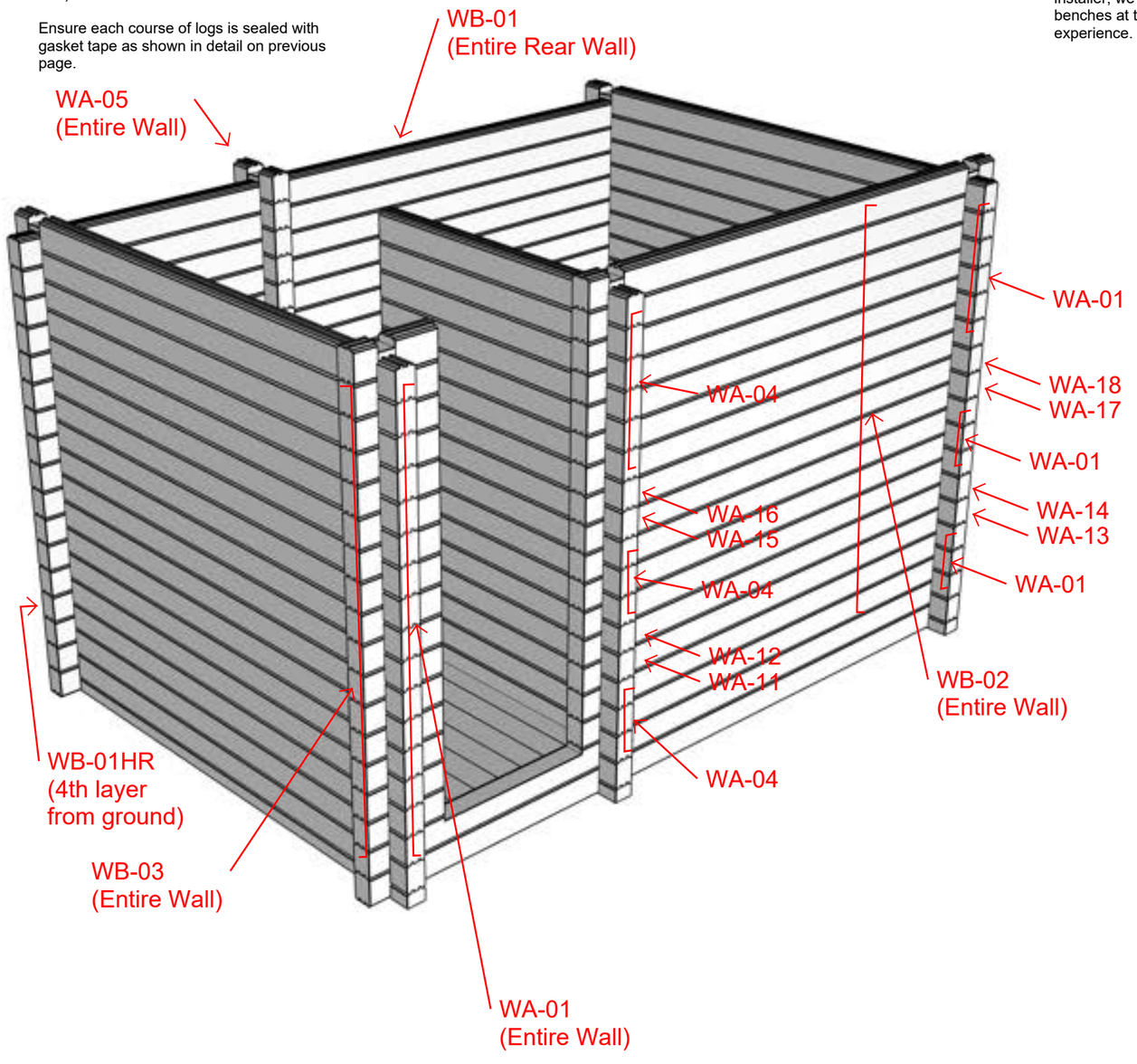


Install benches as shown in detail. No fasteners are required - bench sections simply drop into place once their appropriate layer has been installed.

The lower bench requires two bench assemblies, while the upper bench simply consists of one.

While bench heights can be decided by the installer, we *strongly* recommend installing the benches at the layers shown for the best user experience.

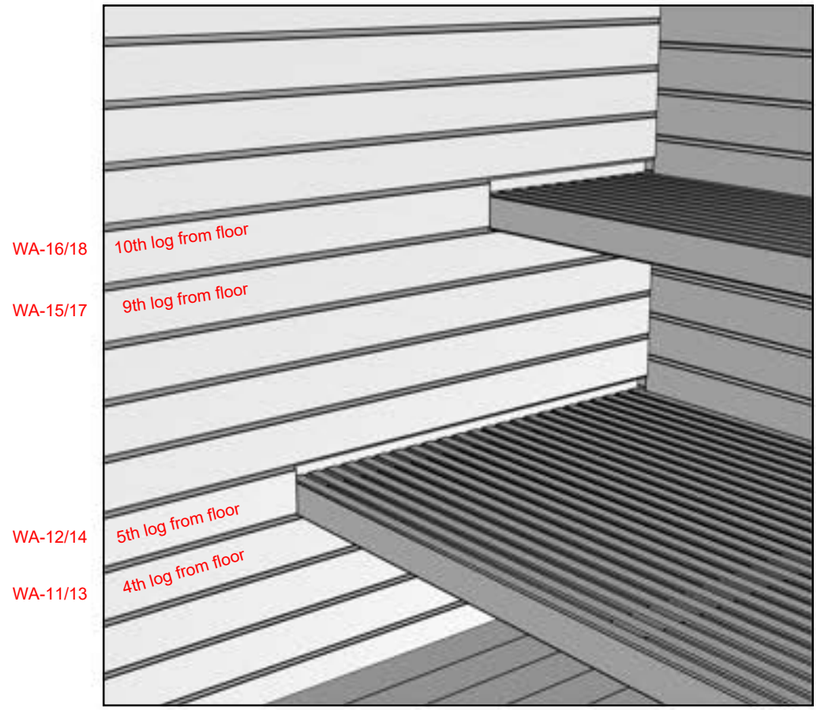


Bench Detail

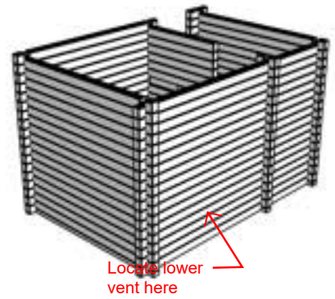


Vent Detail

| | |
|---|---|
| Instructions | |
| Ennadai Polar Star Sauna | |
| Step 4: Wall Build-Up & Benches | |
| Date: 2023-05-16 | Scale: N/S |
| Drawn: EnnWood | Approved: EnnWood |
| Dwg.#: 005 | Rev.#: N/A |

1) Install wall logs as shown below. Note marked vent location.

Ensure each course of logs is sealed with gasket tape.

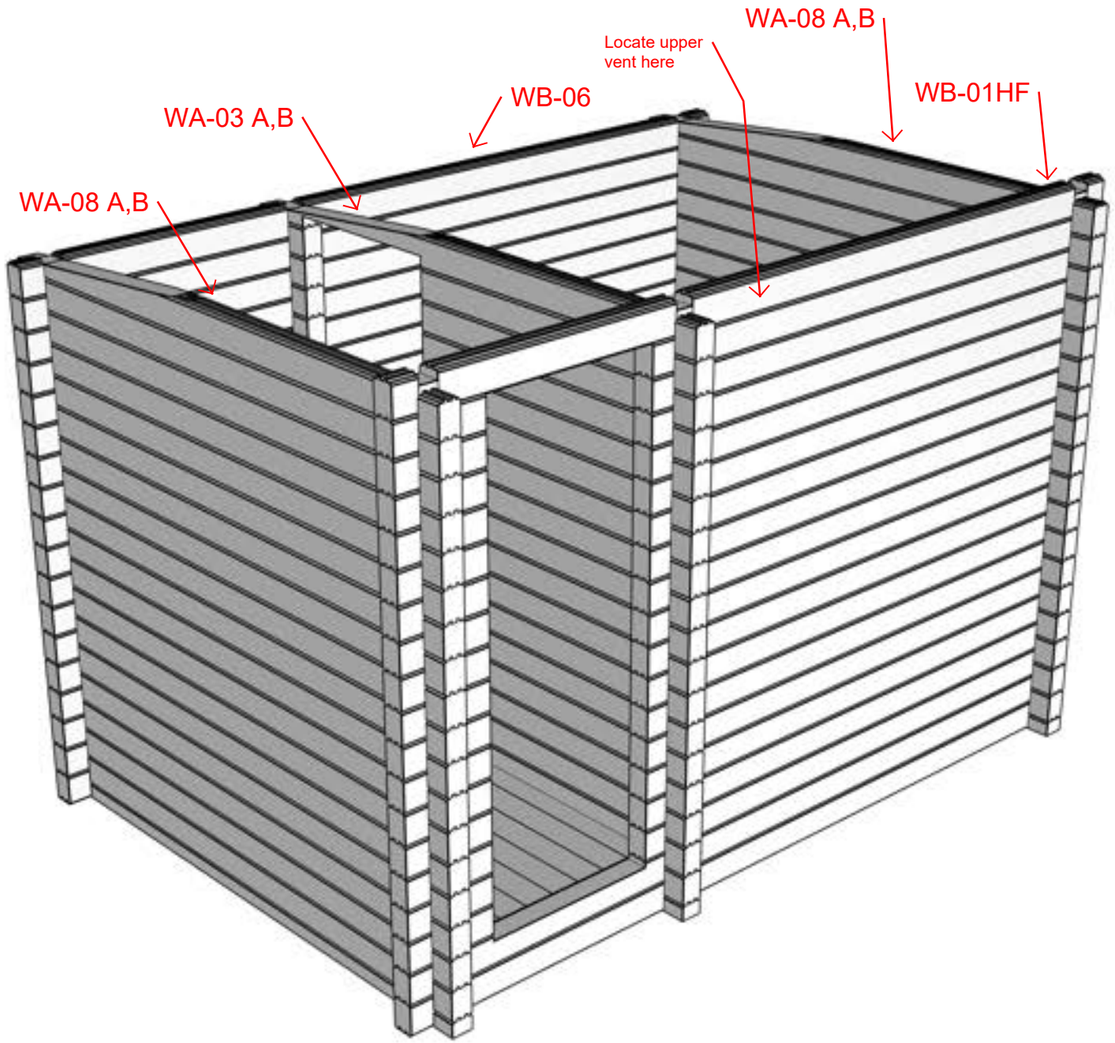


2) Install wall logs as shown below.

Note that WB-07 is infill blocking to fit between joists at rear wall.

Ensure each course of logs is sealed with gasket tape.

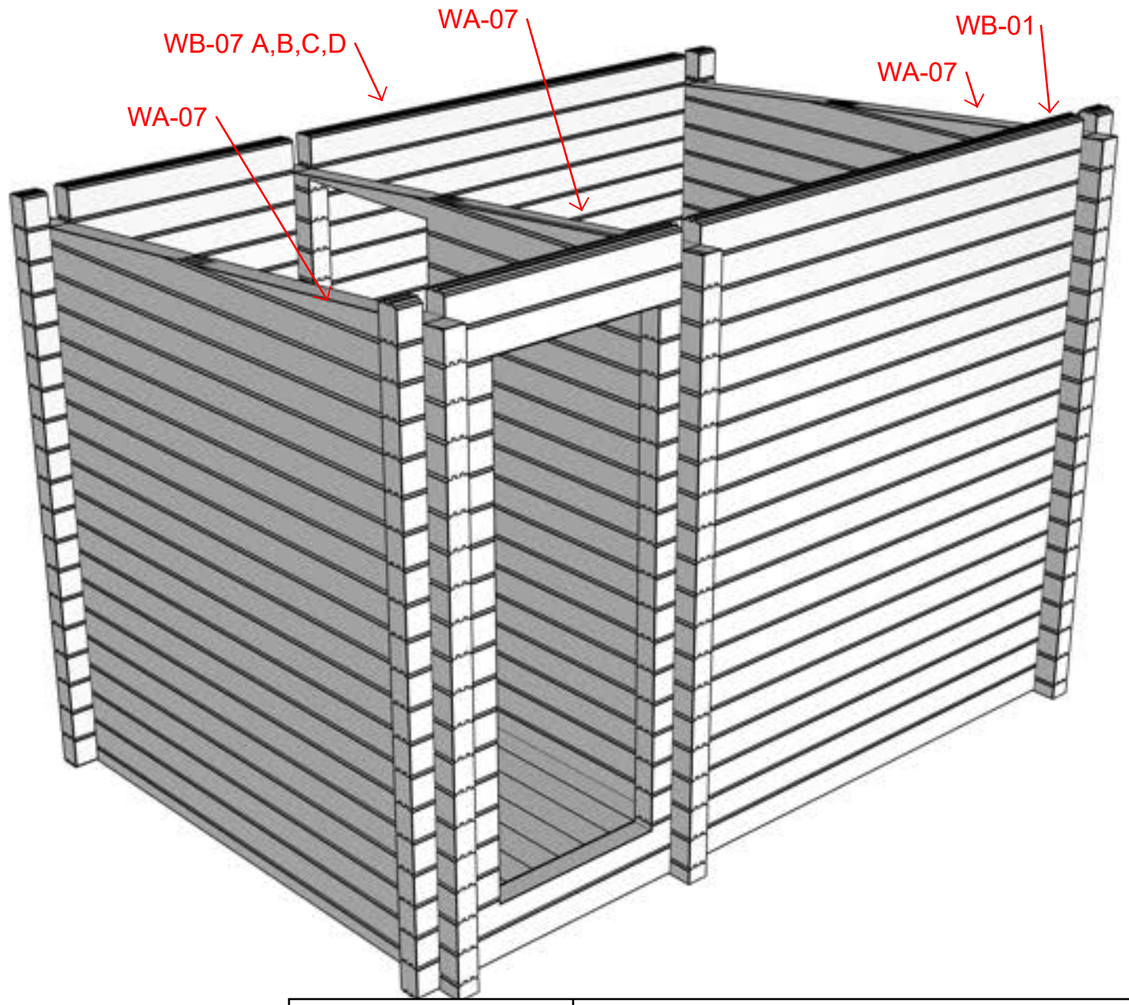


| | | |
|---|---|---|
| | Instructions | |
| | Ennadai Polar Star Sauna | |
| | Step 5: Roof Slope | |
| | Date: 2023-05-16 | Scale: N/S |
| | Drawn: EnnWood | Approved: EnnWood |
| | Dwg.#: 006 | Rev.#: N/A |

1) Install wall logs as shown below.

Note that WB-05 is infill blocking to fit between joists at front wall.

Ensure each course of logs is sealed with gasket tape.

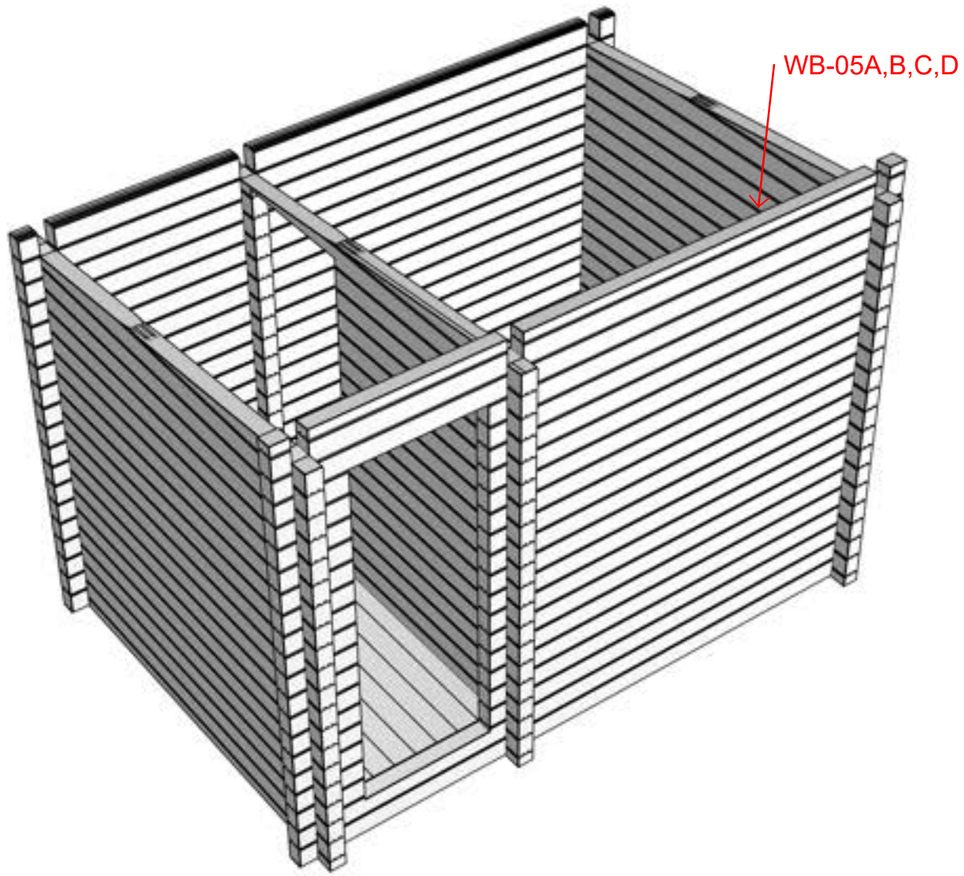


2) Install beams as shown below.

Seal beam pockets with gasket tape and supplied sealant.

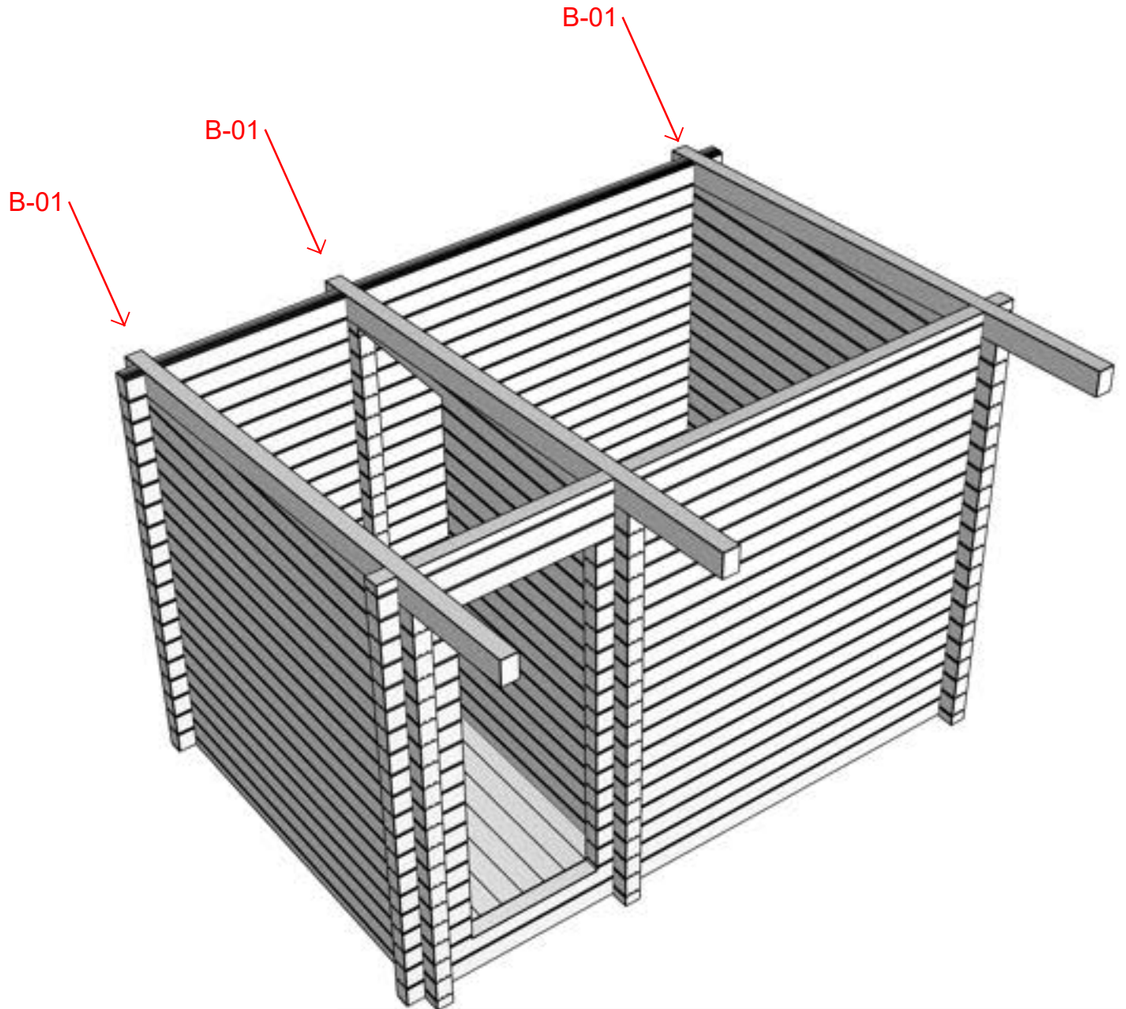


| | |
|---|---|
| Instructions | |
| Ennadai Polar Star Sauna | |
| Step 6: Roof Beams | |
| Date: 2023-05-16 | Scale: N/S |
| Drawn: EnnWood | Approved: EnnWood |
| Dwg.#: 007 | Rev.#: N/A |

1) Install roof panels as shown below. Ensure perimeter of bathing area is sealed with supplied sealant prior to install. Secure roof panels to beams with supplied screws.

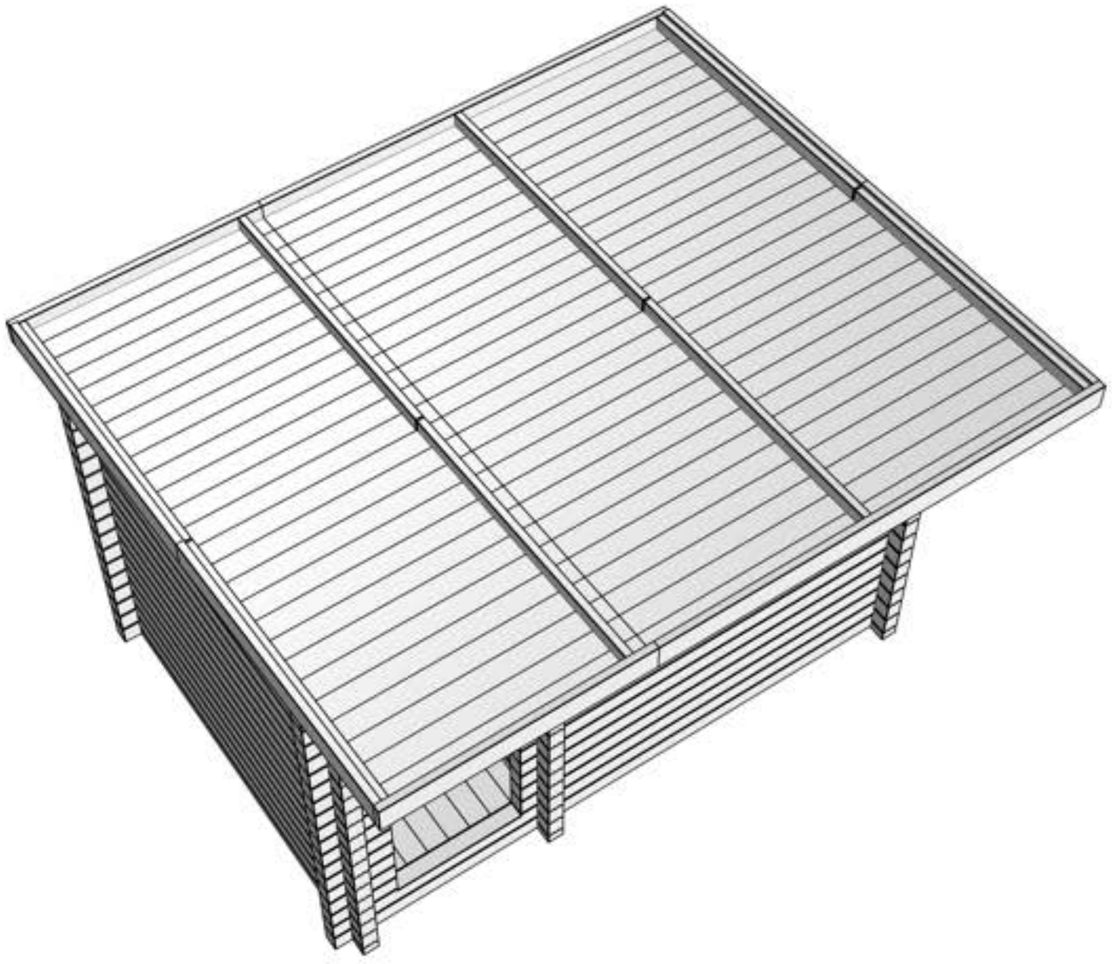

2) Install roof blocking with supplied screws as shown below.

Fit insulation in gaps above bathing area.

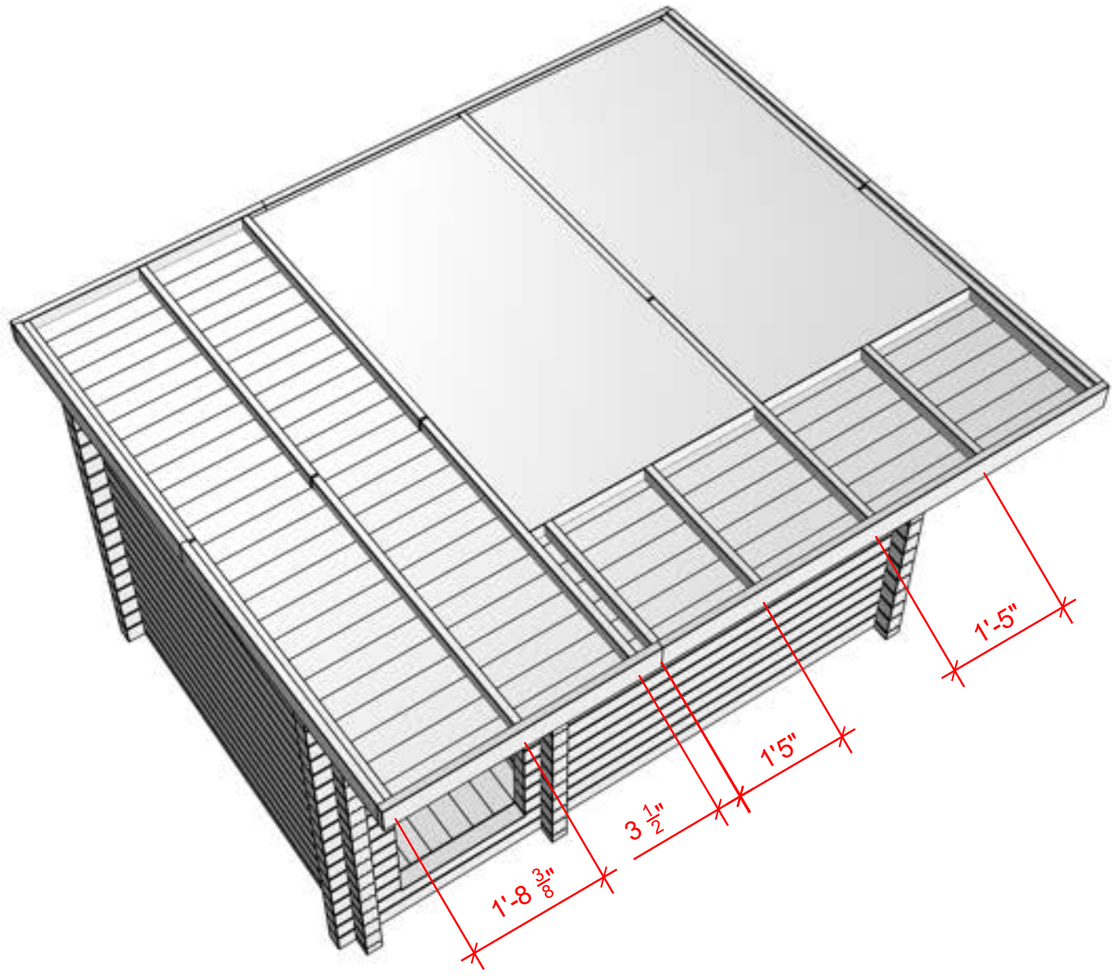


| | | |
|---|---|---|
| | Instructions | |
| | Ennadai Polar Star Sauna | |
| | Step 7: Roof System Pt. 1 | |
| | Date: 2023-05-16 | Scale: N/S |
| | Drawn: EnnWood | Approved: EnnWood |
| | Dwg.#: 008 | Rev.#: N/A |

1) Install strapping as shown. Pre drill to avoid splitting and secure to blocking with supplied screws.

Note that no specific spacing is required, just aim to keep the spacing even and use six rows as pictured. The more even the spacing, the easier the roofing install will be.

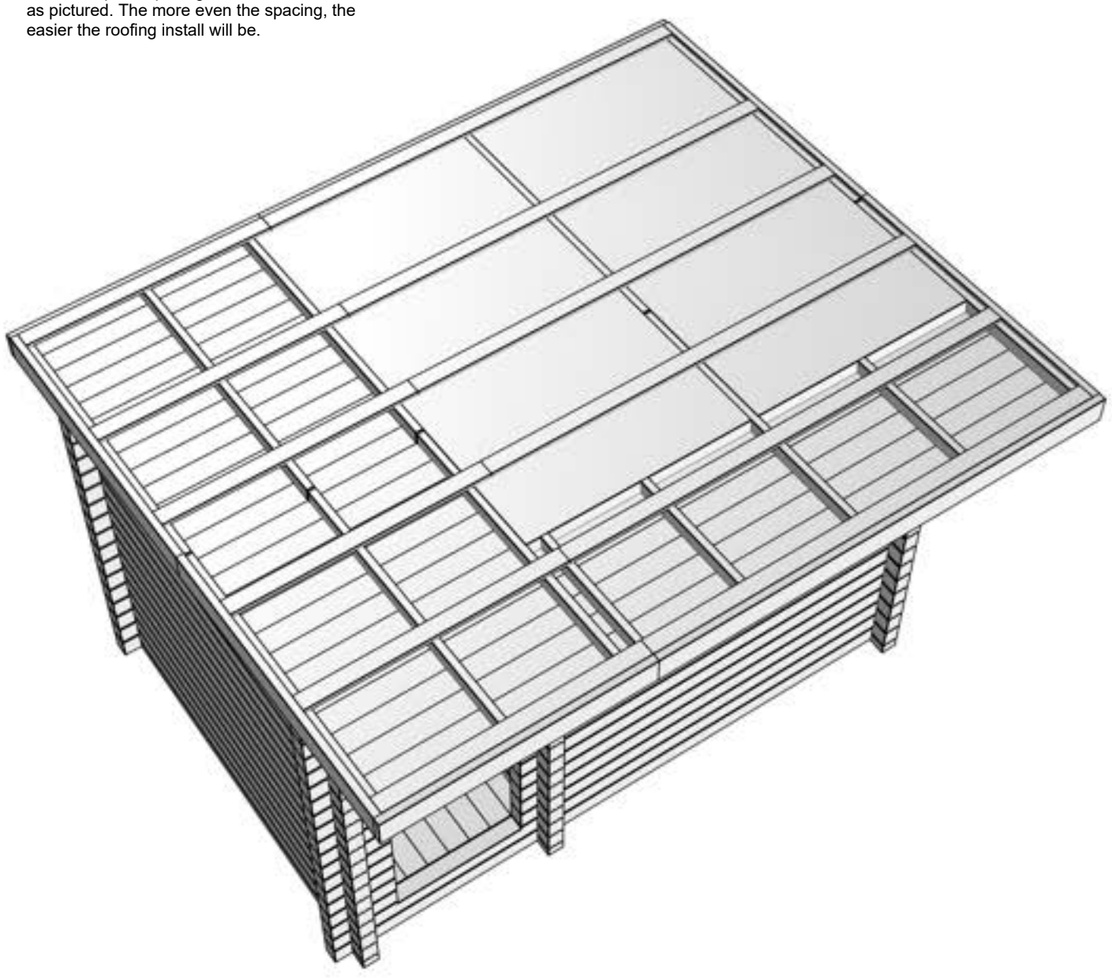

2) Install metal roofing with supplied colour coordinated roofing screws.

Overlap each sheet by one ridge. Allow ~2.5” of overhang on all sides.

Do not over tighten roofing screws. The rubber washer must not bottom out, or the screw holes may develop leaks over time.

Ennadai bears no responsibility for incorrectly installed roofing.

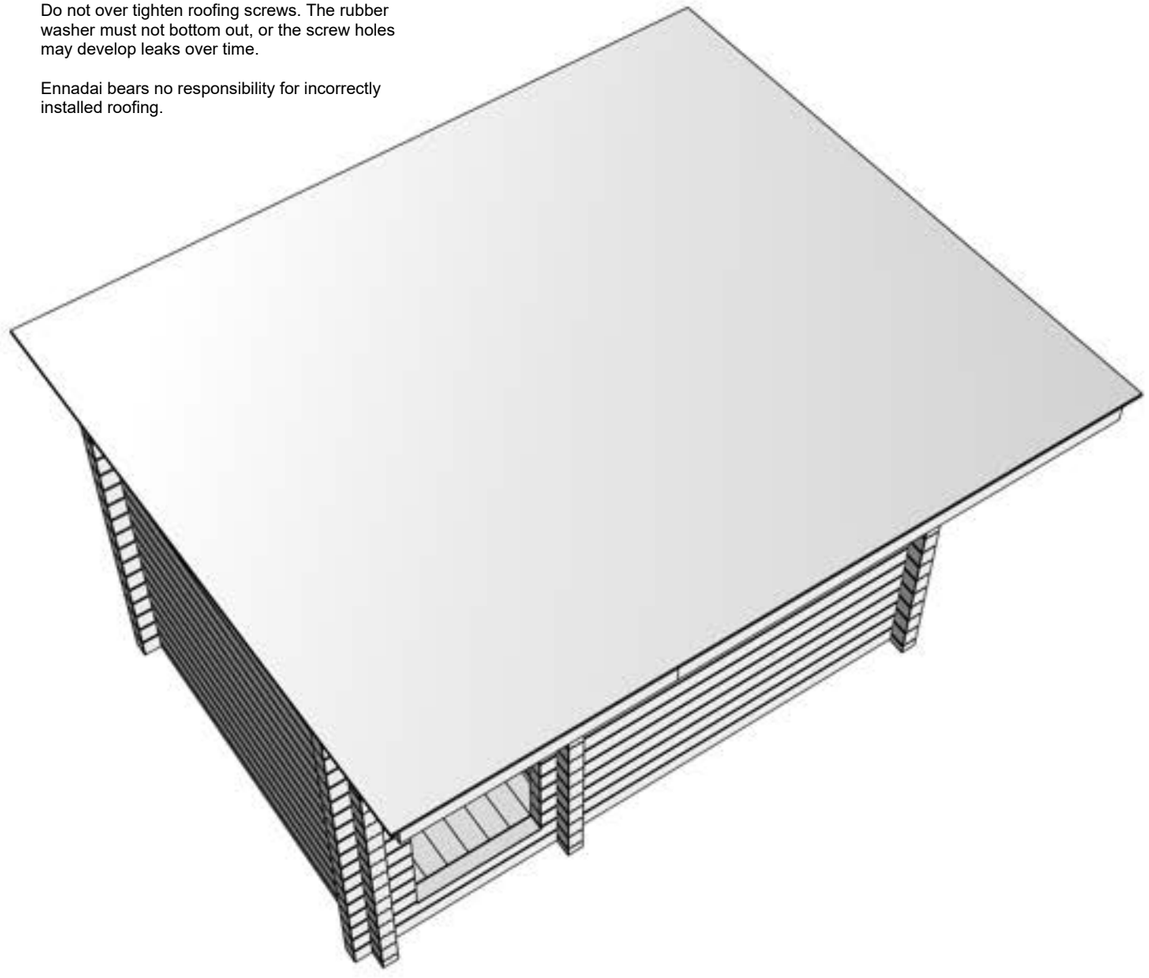

| | | |
|---|---|---|
| | Instructions | |
| | Ennadai Polar Star Sauna | |
| | Step 8: Roof System Pt. 2 | |
| | Date: 2023-05-16 | Scale: N/S |
| | Drawn: EnnWood | Approved: EnnWood |
| | Dwg.#: 009 | Rev.#: N/A |

1) Install fascia as shown. Secure with supplied screws.

Note that only half of the fascia is pictured.
Install remainder in same manner.

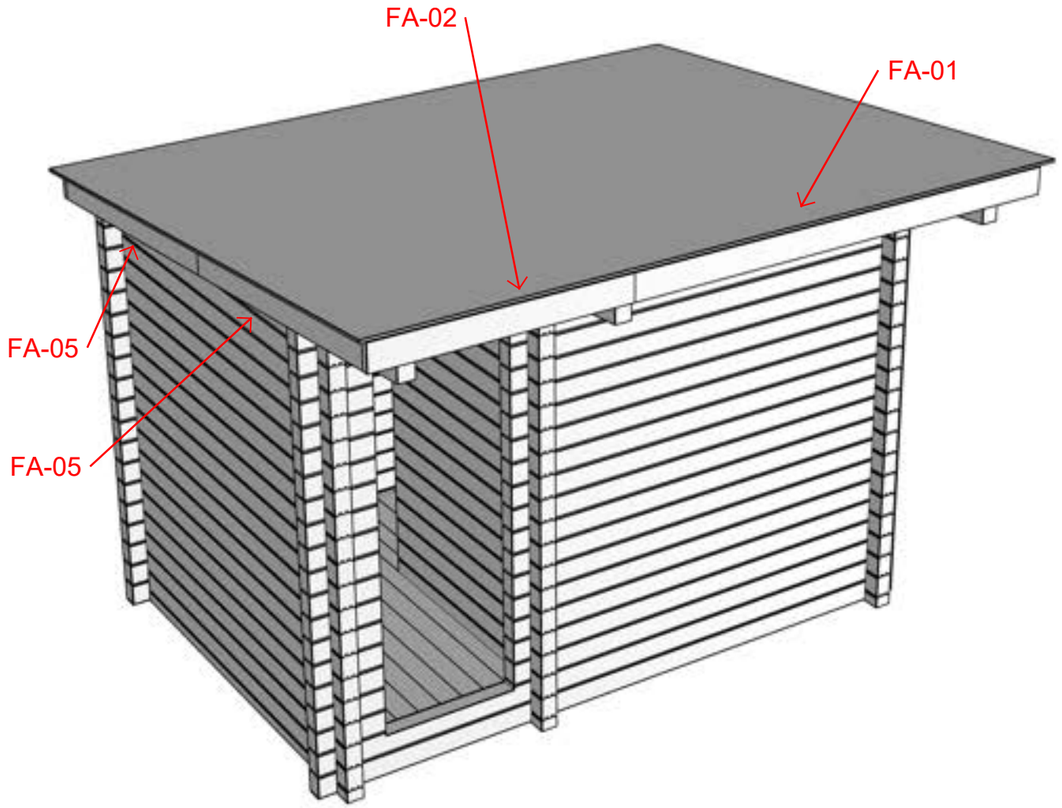


2) Install trim and casing in each door frame as pictured. Pre-drill to avoid splitting and fasten using supplied screws.

Ensure built-in door stops face interior space when installing casing.

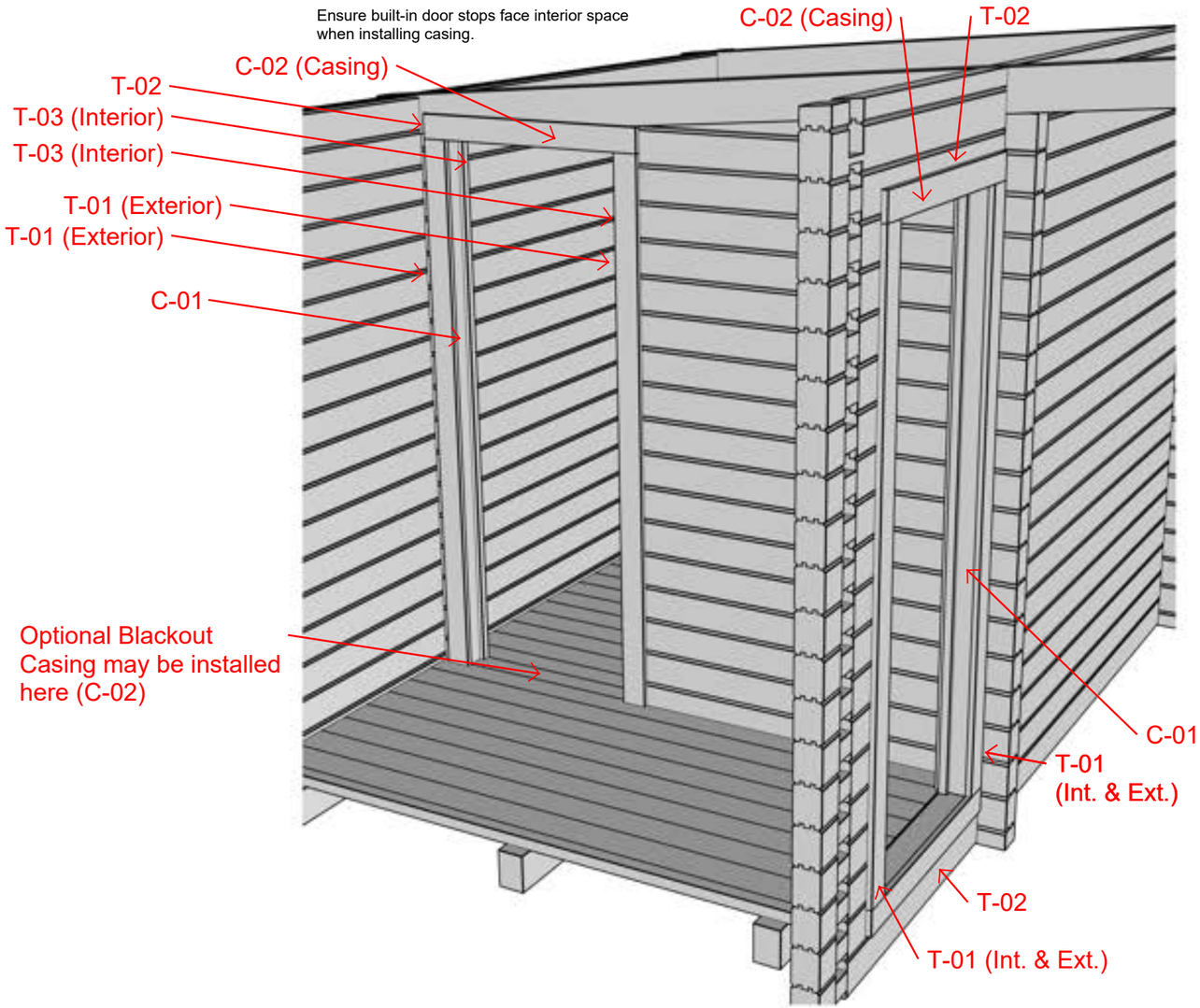


| | |
|---|---|
| Instructions | |
| Ennadai Polar Star Sauna | |
| Step 9: Fascia & Trim | |
| Date: 2023-05-16 | Scale: N/S |
| Drawn: EnnWood | Approved: EnnWood |
| Dwg.#:010 | Rev.#: N/A |



1) Install doors as shown. First affix CampLite hinges to wall, then secure doors with supplied screws.

Smooth surface of door is intended to face outward. Do not tighten screws completely until satisfied with position of door.

Note that both doors are intended to open outward. Hinges to be installed to allow for outward swing.

Install door handles in desired position using supplied screws. Offset interior and exterior handle positions slightly to avoid screw contact inside the door. Ensure handle screws are fixed to door bracing and not only the door panel, or screws may protrude through door.

| | | |
|---|---|---|
| ENNADAI WOODWORKS | Instructions | |
| | Ennadai Polar Star Sauna | |
| | Step 10: Doors | |
| | Date: 2023-05-16 | Scale: N/S |
| | Drawn: EnnWood | Approved: EnnWood |
| | Dwg.#: 011 | Rev.#: N/A |